Saved from manuals.plus.
Open the live page for links to other documents and user manuals.

5Rcom Corner TV Stand with Mount for 70 inch

5Rcom Corner TV Stand with Mount

Model: Corner TV Stand with Mount for 70 inch

1. Product Overview

The 5Rcom Corner TV Stand is designed to accommodate most 32-75 inch flat or curved screen televisions. Its unique trapezoid design allows for versatile placement in various room corners, optimizing space. The stand features a built-in swivel mount and three tempered glass shelves for organizing media equipment and accessories.



Figure 1.1: Fully assembled 5Rcom Corner TV Stand with a television and media components.

- **Compatibility:** Supports TVs from 32 to 75 inches with VESA patterns from 100x100mm to 600x400mm.
- **Design:** Trapezoid shape for corner placement, supported by silent pads to minimize wobbling and noise.
- **Storage:** Three black tempered glass shelves provide ample space for video equipment, books, and other items.
- **Weight Capacity:** TV mount supports up to 110 lbs. Top shelf: 88 lbs. Middle and bottom shelves: 33 lbs each.

2. Safety Information

Please read and understand all instructions before assembly and use. Keep this manual for future reference.

- Ensure all components are present and undamaged before beginning assembly.
- Do not exceed the maximum weight capacities for the TV mount (110 lbs) and shelves (top: 88 lbs, middle/bottom: 33 lbs each).
- Always use the provided anti-tip hardware to secure the TV stand to the wall, especially in households with children or pets.
- Distribute weight evenly on shelves to maintain stability.
- Avoid placing the stand in high-traffic areas where it could be easily bumped.
- Refer to the assembly instructions and care instructions provided with the product for additional safety information.

3. Package Contents

Verify that all parts are included and undamaged before proceeding with assembly. While a detailed parts list is typically provided in the physical manual, common components include:

- Tempered Glass Shelves (3)
- Main Support Column (Metal)
- TV Mounting Brackets and Arms
- Support Rods and Connectors
- Various Screws, Washers, and Spacers for assembly and TV mounting
- Cable Management Clips
- Assembly Tools (e.g., Allen wrench)



Figure 3.1: VESA compatibility chart and included TV mounting hardware.

4. Setup and Assembly Instructions

Assembly of the 5Rcom Corner TV Stand is designed to be straightforward with the provided easy-to-follow installation guide. It is recommended to have a second person assist during certain steps, especially when lifting and mounting the television.

General Assembly Steps:

1. **Unpack and Organize:** Carefully unpack all components and lay them out. Identify each part using the provided parts list in your physical manual.
2. **Assemble the Base:** Begin by assembling the base structure, including the bottom glass shelf and the main support column. Ensure all connections are secure.
3. **Attach Middle and Top Shelves:** Install the middle and top tempered glass shelves onto the support rods, ensuring they are level and stable.
4. **Install TV Mount:** Attach the TV mounting bracket to the main support column. This typically involves securing the vertical arms to the horizontal bracket.
5. **Prepare TV for Mounting:** Attach the appropriate mounting arms to the back of your television, ensuring the correct VESA pattern screws are used. Refer to Figure 3.1 for VESA patterns and screw types.
6. **Mount the TV:** Carefully lift your television and hook the mounting arms onto the TV mount bracket. Secure the TV in place using the locking mechanisms.
7. **Cable Management:** Utilize the included cable management clips to organize and conceal TV and media device cables along the main support column.



Figure 4.1: Overview of stand components and assembly points.

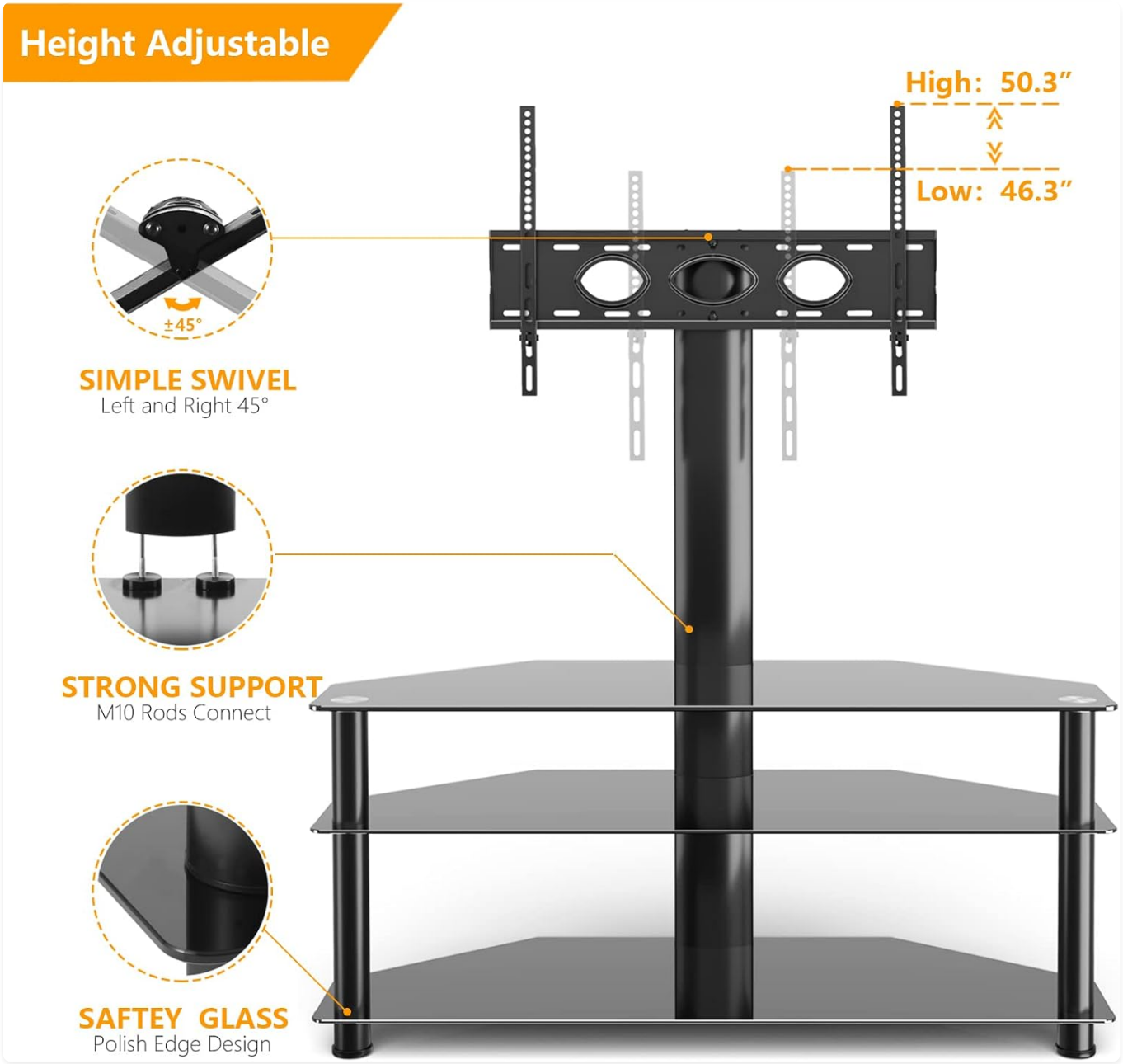

Figure 4.2: Detailed view of the height-adjustable and swivel mount mechanism.

5. Operating Instructions

The 5Rcom Corner TV Stand offers flexible viewing options through its swivel and height adjustment features.

5.1 Swivel Function

The integrated TV mount allows for a swivel of 45 degrees in each direction (total 90 degrees). This feature enables you to adjust the viewing angle of your television to suit different seating positions in the room.

- To swivel the TV, gently grasp the sides of the television and rotate it to the desired angle.
- Ensure no cables are snagged or pulled taut during rotation.

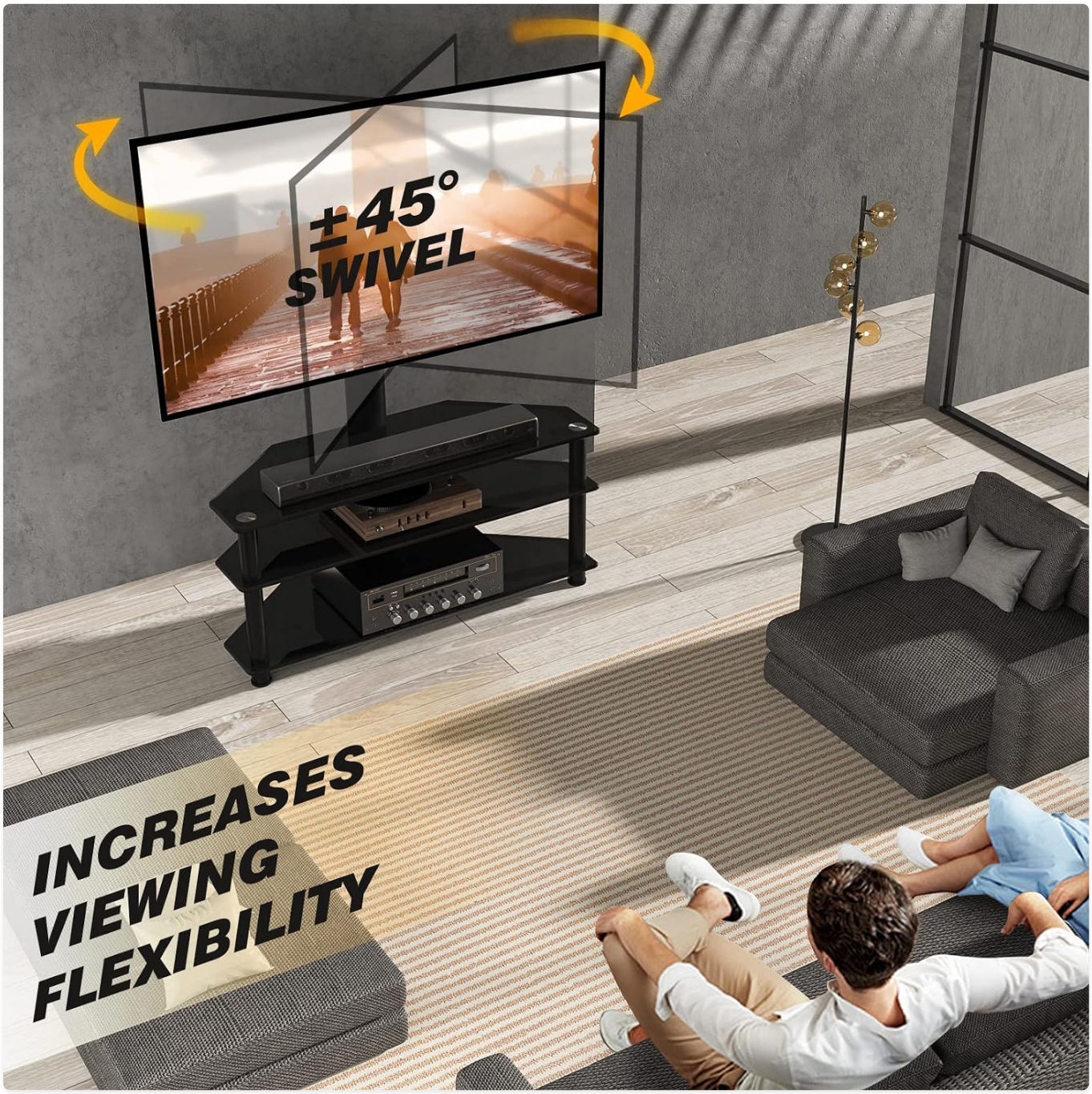

Figure 5.1: Swivel functionality for enhanced viewing flexibility.

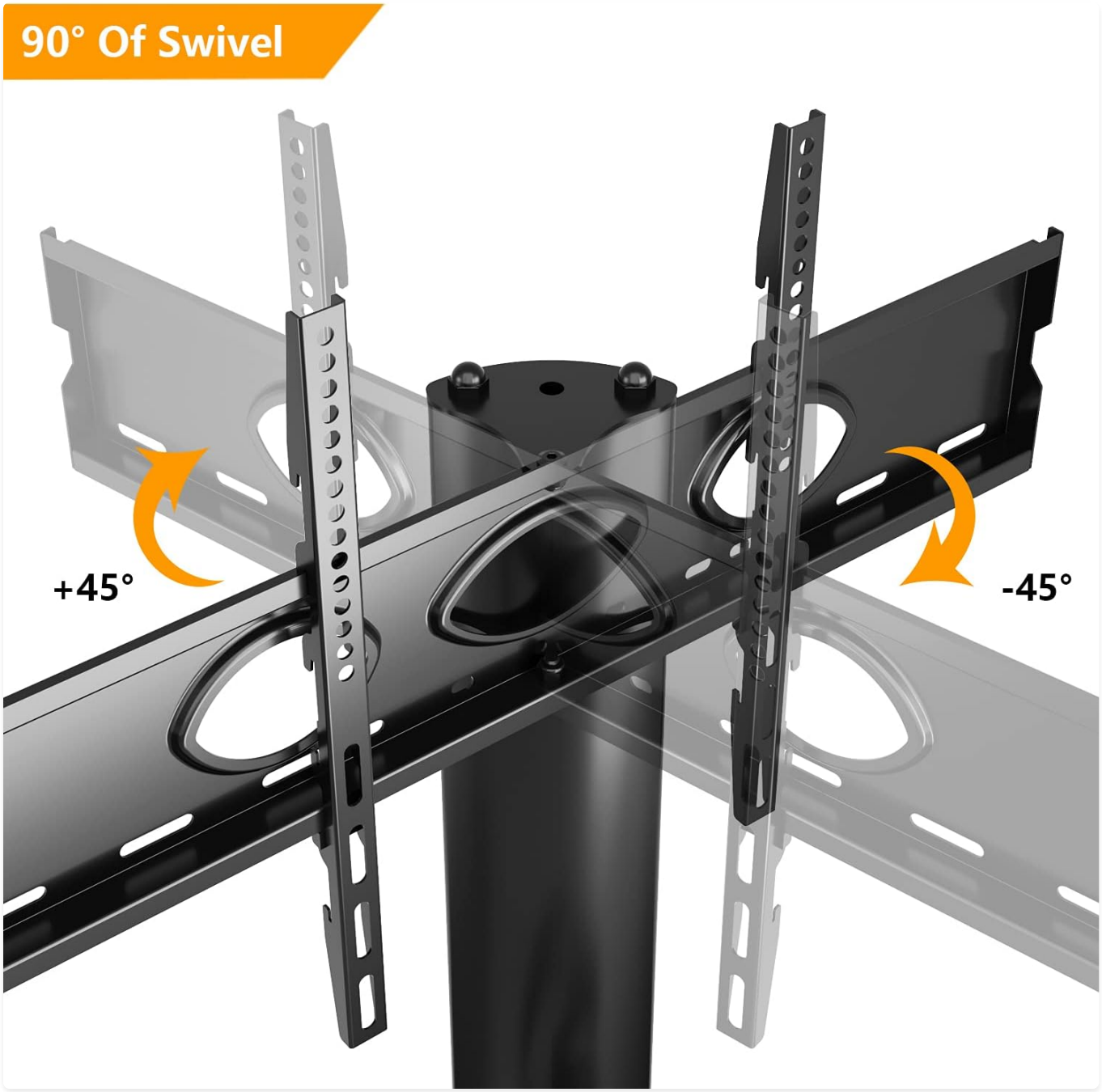

Figure 5.2: Detailed view of the mount's swivel range.

5.2 Height Adjustment

The TV mount offers 3 levels of height adjustment, allowing you to set the total height of the television from 46 inches to 50 inches off the floor. This adjustment is typically performed during the initial assembly or re-assembly.

- To adjust the height, you will need to unmount the TV and re-position the mounting arms on the main support column to a different set of holes.
- Refer to the assembly instructions for specific steps on adjusting the mount height.

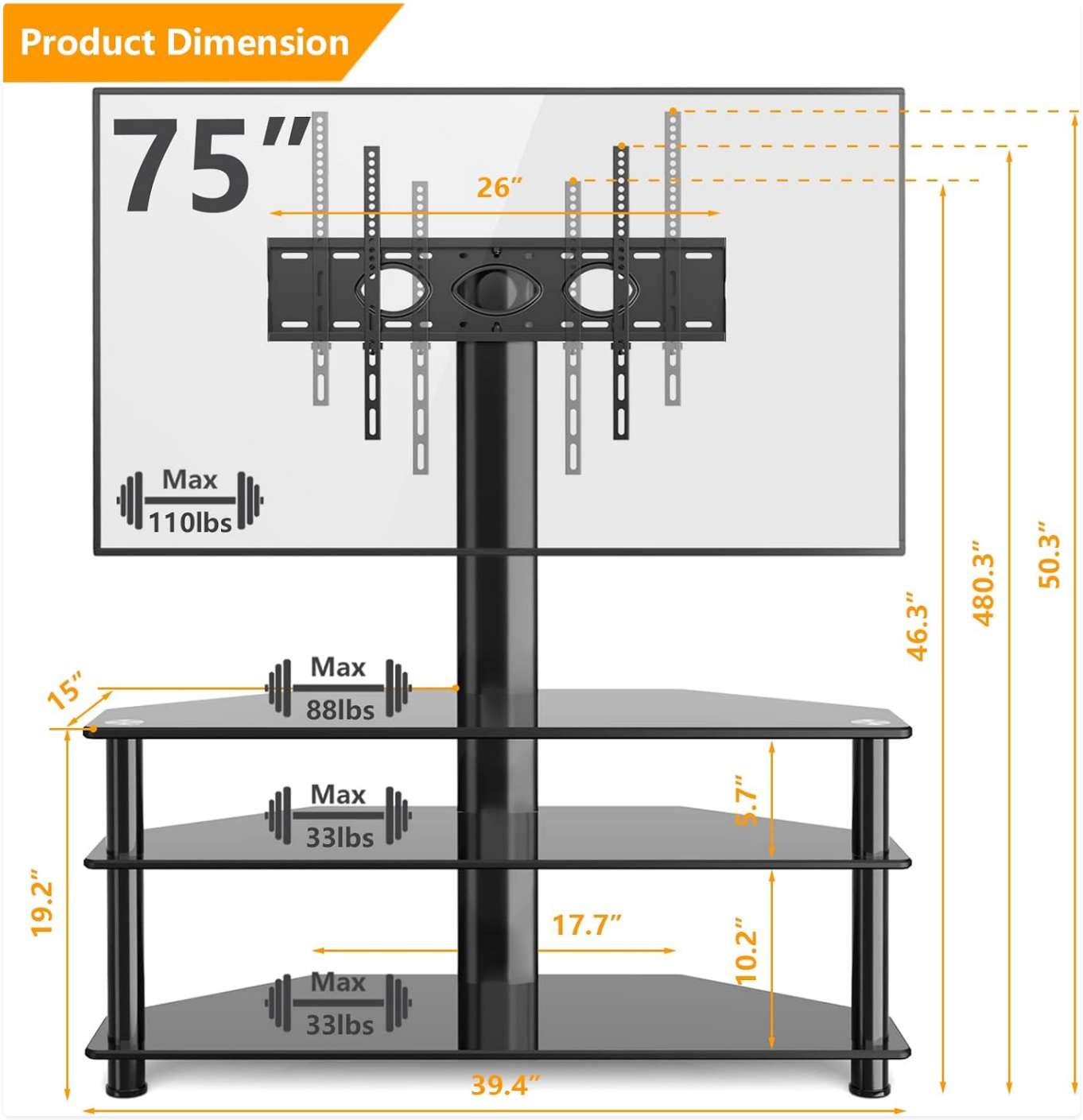

Figure 5.3: Product dimensions including height adjustment range.

6. Maintenance

Proper care and maintenance will ensure the longevity and appearance of your 5Rcom Corner TV Stand.

- **Cleaning Glass Surfaces:** Use a soft, lint-free cloth and a glass cleaner to wipe down the tempered glass shelves. Avoid abrasive cleaners or materials that could scratch the glass.
- **Cleaning Metal Parts:** Wipe metal components with a soft, damp cloth. For stubborn marks, a mild soap solution can be used, followed by drying thoroughly.
- **Regular Checks:** Periodically check all screws and connections to ensure they remain tight and secure. Re-tighten if necessary.
- **Dusting:** Regular dusting with a dry, soft cloth will help maintain the stand's appearance.

7. Troubleshooting

This section addresses common issues you might encounter with your TV stand.

Problem	Possible Cause	Solution
Stand feels unstable or wobbly.	Loose connections; uneven floor; TV weight exceeds capacity.	Ensure all screws and bolts are tightened. Place stand on a level surface. Verify TV weight is within the 110 lbs limit. Consider using the anti-tip hardware.
Difficulty during assembly (e.g., screws not fitting, parts not aligning).	Incorrect part orientation; cross-threaded screws; manufacturing defect.	Review the assembly instructions carefully, paying attention to part orientation. Do not overtighten screws initially; hand-tighten first, then fully tighten. If issues persist, contact customer support.
TV does not swivel smoothly.	Obstruction; excessive weight; mechanism issue.	Check for any cables or objects obstructing the swivel path. Ensure TV weight is within limits. If the issue persists, inspect the swivel mechanism for damage.

8. Specifications

Feature	Detail
Brand	5Rcom
Model Number	Corner TV Stand with Mount for 70 inch
Item Weight	55 pounds
Product Dimensions (L x W x H)	43.3 x 15.7 x 52 inches
Material	Glass & Metal
Color	Black
Mounting Type	Floor Mount
Movement Type	Fixed (stand), Swivel (mount)
Maximum Compatible TV Size	75 Inches
Minimum Compatible TV Size	32 Inches
VESA Compatibility	100x100mm to 600x400mm
Maximum Tilt Angle (Swivel)	45 Degrees (each direction)

Feature	Detail
TV Mount Capacity	110 lbs
Shelf Capacity (Top/Middle/Bottom)	88 lbs / 33 lbs / 33 lbs

9. Warranty and Support

5Rcom is committed to providing a positive customer experience. For any questions, concerns, or assistance with your product, please refer to the following information:

- **Return Policy:** This product typically comes with a 30-day easy return policy. Please refer to your purchase platform for specific return window and conditions.
- **Protection Plans:** Extended protection plans may be available for purchase to cover your product beyond the standard warranty period. Check with your retailer for options such as 2-Year or 3-Year Protection Plans.
- **Customer Support:** For technical assistance, missing parts, or any other inquiries, please contact 5Rcom customer support through the retailer's platform or the official 5Rcom website.

© 2024 5Rcom. All rights reserved.

Ask a question about this manual

Ask about setup, troubleshooting, compatibility, parts, safety, or missing instructions. Manuals+ will review the question and use this page's manual context to help answer it.

Name

Anonymous

Email

you@example.com

After a successful submission, we securely hash the supplied account or form email before sending it to Microsoft Advertising for conversion attribution. Privacy details.

Question

Example: How do I reset this device or fix this error?

Details

Model number, symptoms, what you tried, or the section of the manual you are using.

Submit question

Open the live page

https://manuals.plus/asin/B07KTTQ7ZJ

More documents and user manuals: **https://manuals.plus/**