Saved from manuals.plus.
Open the live page for links to other documents and user manuals.

unho AU-U-C8213

UNHO Tilting TV Wall Mount Instruction Manual

Model: AU-U-C8213

Introduction

Thank you for choosing the UNHO Tilting TV Wall Mount. This mount is designed to securely hold flat-panel LCD, LED, and Plasma televisions ranging from 32 to 85 inches, with a maximum load capacity of 60 kg. Its slim design and 15-degree tilt mechanism provide an optimal viewing experience and help manage cables effectively. Please read this manual thoroughly before installation to ensure safe and correct setup.

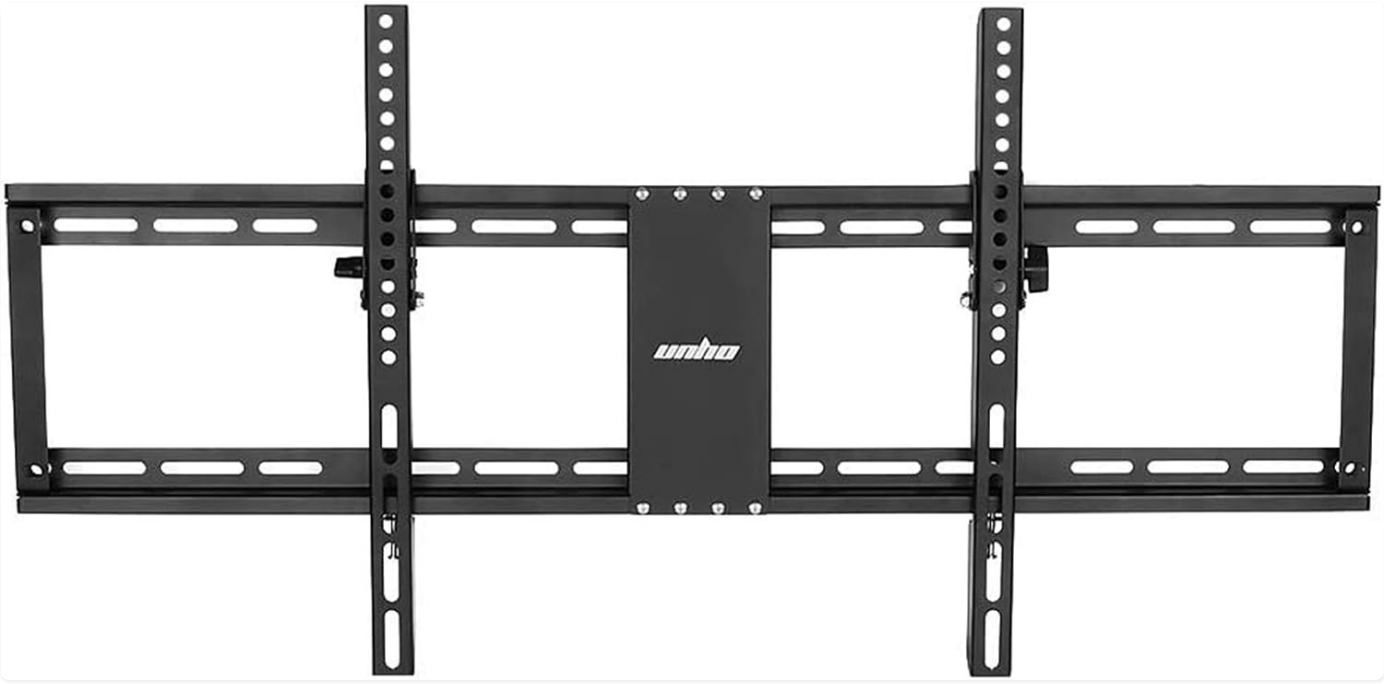

Image: Front view of the UNHO Tilting TV Wall Mount, showcasing its sturdy black metal frame and adjustable mounting arms.

Safety Information

Improper installation or use of this product can result in serious injury or damage. Please observe the following safety precautions:

- Do not exceed the maximum load capacity of 60 kg (132 lbs).
- Ensure the wall structure can safely support the combined weight of the mount and your television.
- Always use a stud finder to locate wood studs or ensure concrete/brick walls are suitable for mounting.
- Wear appropriate safety gear, including eye protection, during installation.
- If you are unsure about any part of the installation process, seek professional assistance.
- Keep children and pets away from the installation area.

Package Contents

Verify that all components are present before beginning installation. If any parts are missing or damaged, contact customer support.

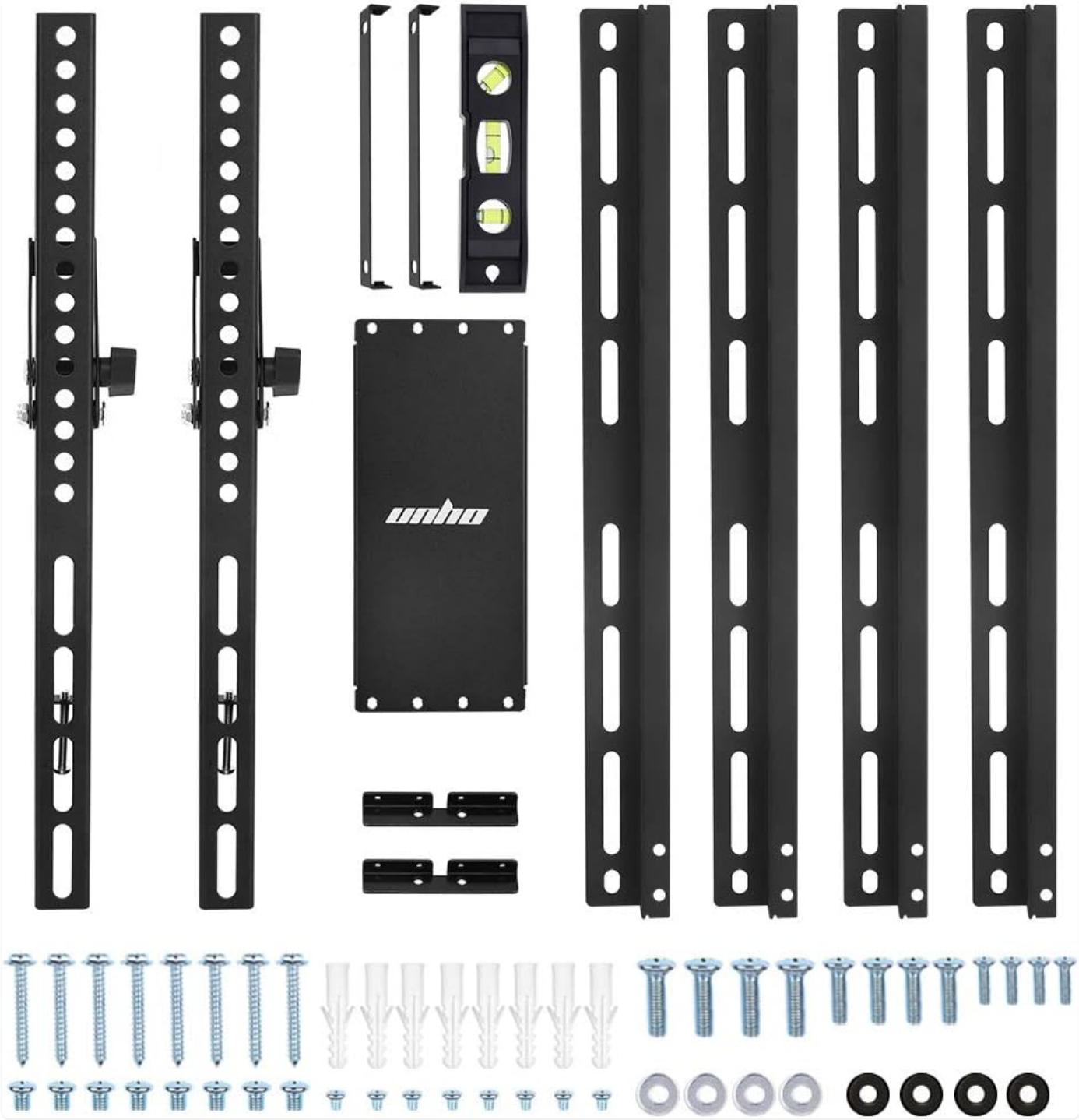

Image: All components of the UNHO TV Wall Mount laid out, including the wall plate, TV brackets, various screws, anchors, washers, and a small spirit level.

- Wall Plate Assembly
- TV Mounting Brackets (2x)
- Spirit Level
- Assorted Screws, Washers, and Anchors for TV and Wall Mounting
- Instruction Manual (this document)

Setup and Installation

Tools Required (Not Included):

- Pencil
- Phillips Head Screwdriver
- Drill with appropriate drill bits (for wood studs or masonry)
- Stud Finder (for wood stud installation)
- Measuring Tape
- Hammer (for masonry anchors)

Step 1: Attach TV Brackets to Television

1. Carefully place your TV face-down on a soft, clean surface to prevent screen damage.
2. Identify the VESA mounting holes on the back of your TV.
3. Select the correct screws (M4, M6, or M8) and spacers that fit your TV's mounting holes. Refer to your TV's manual for VESA compatibility.
4. Align the TV mounting brackets with the VESA holes. Ensure the hooks on the brackets face downwards.
5. Secure the brackets to the TV using the selected screws and washers. Do not overtighten.



Image: Close-up of a hand using a screwdriver to secure a TV bracket, illustrating the ease of operation.

Step 2: Mount Wall Plate to Wall

This mount is suitable for concrete, solid brick, and plasterboard walls. Different wall types require different installation methods.



Image: Diagram showing how the wall mount fits for 16-inch and 24-inch wood studs, indicating adjustable horizontal positioning.

For Wood Stud Walls:

1. Use a stud finder to locate the edges and center of at least two adjacent wood studs. Mark the center of the studs.
2. Position the wall plate at the desired height on the wall, ensuring it is level using the included spirit level. Mark the drilling locations through the holes on the wall plate that align with the stud centers.
3. Drill pilot holes at the marked locations. The drill bit size should be slightly smaller than the lag bolts.
4. Attach the wall plate to the wall using the lag bolts and washers. Tighten securely, but do not overtighten.



Image: The UNHO TV wall mount shown with a spirit level placed on top, indicating the importance of ensuring the mount is perfectly horizontal during installation.

For Concrete/Brick Walls:

1. Position the wall plate at the desired height on the wall. Use the spirit level to ensure it is perfectly horizontal. Mark the drilling locations.
2. Drill holes at the marked locations using a masonry drill bit of the appropriate size for the concrete anchors.
3. Insert the concrete anchors into the drilled holes, tapping them gently with a hammer until flush with the wall surface.
4. Attach the wall plate to the wall using the lag bolts and washers, screwing them into the anchors. Tighten securely.

Step 3: Hang TV on Wall Plate

1. With assistance, carefully lift the TV (with brackets attached) and hook the TV brackets onto the top edge of the wall plate.
2. Gently lower the TV until the brackets are fully seated on the wall plate.
3. Locate the safety screws or locking mechanisms at the bottom of the TV brackets. Secure these to prevent the TV

from accidentally lifting off the mount.

Operating Instructions

Adjusting the Tilt Angle

This UNHO wall mount allows for a tilting angle of up to 15 degrees to optimize your viewing experience and reduce glare.

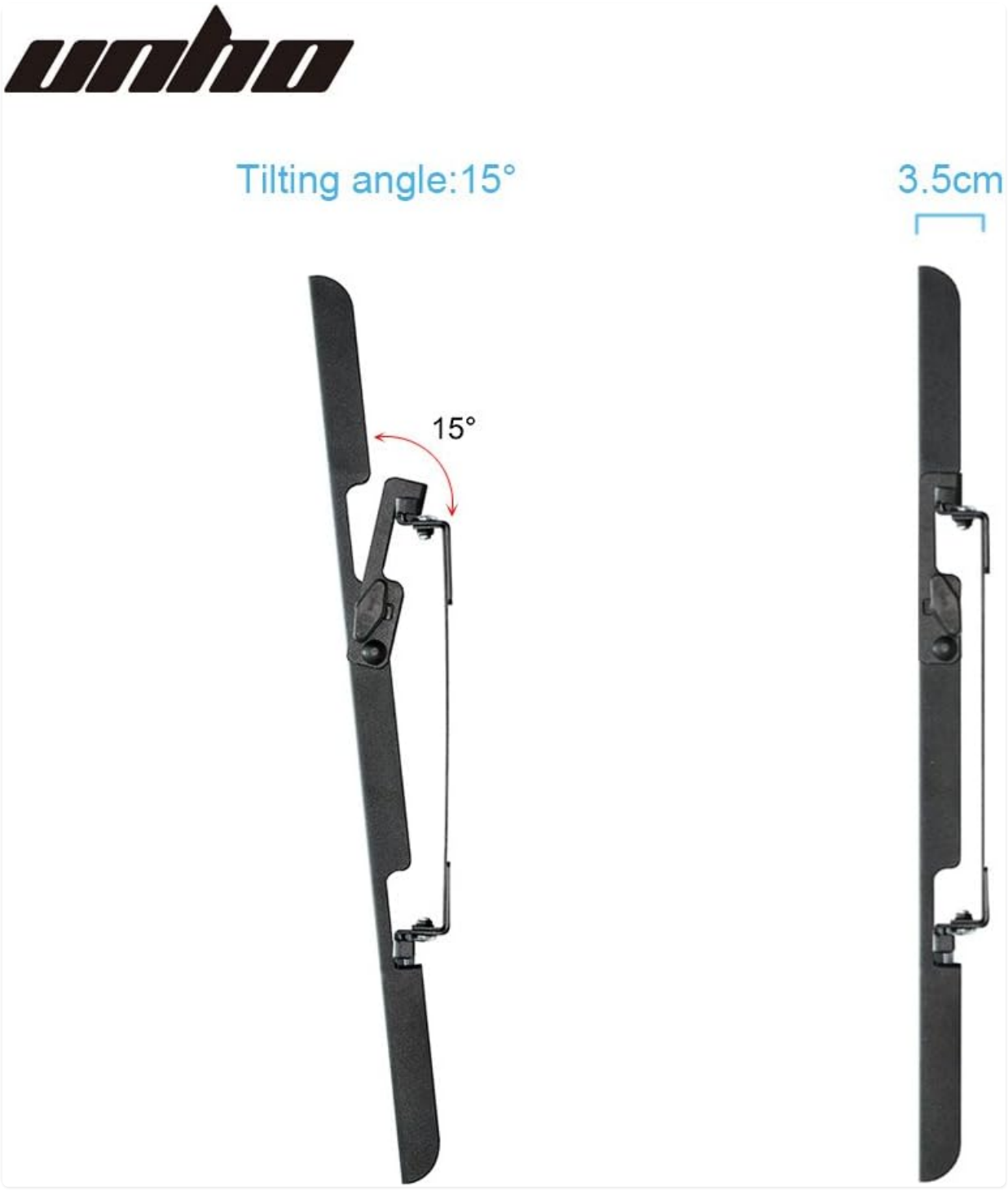

Image: Side view diagram of the TV wall mount showing the 15-degree tilting capability and the slim 3.5cm profile from the wall.

1. To adjust the tilt, gently push the bottom of the TV forward or pull it back.
2. The friction mechanism will hold the TV at the desired angle within the 15-degree range.

3. Ensure the TV is stable after adjustment.

Maintenance

The UNHO TV wall mount requires minimal maintenance. Follow these guidelines to ensure its longevity:

- Regularly check all screws and bolts to ensure they remain tight and secure.
- Clean the mount with a soft, dry cloth. Avoid abrasive cleaners or solvents.
- Do not hang anything from the mount other than the intended television.
- Periodically inspect the mount for any signs of wear or damage. If damage is observed, discontinue use and contact customer support.

Troubleshooting

Problem	Possible Cause	Solution
TV is not level after installation.	Wall plate not installed level.	Remove TV, re-level the wall plate using the spirit level, and re-mount.
Mount feels unstable.	Screws are loose or incorrect anchors used. Exceeded weight capacity.	Ensure all screws are tightened. Verify wall type and correct anchors were used. Confirm TV weight is within 60 kg limit.
Cannot attach TV brackets to TV.	Incorrect screw size or VESA pattern mismatch.	Refer to your TV's manual for correct VESA screw size. Check if your TV's VESA pattern is supported by the mount.

Specifications

- **Model Number:** AU-U-C8213
- **Material:** Cold-rolled Steel (Acier alli)
- **Compatible TV Sizes:** 32 - 85 inches
- **Maximum Load Capacity:** 60 kg (132 lbs)
- **Tilt Angle:** Up to 15 degrees
- **Wall Distance (Ultra Slim):** 35mm (3.5cm)
- **Supported VESA Patterns (Horizontal x Vertical):**

- 100x100mm
- 200x100mm, 200x200mm
- 300x200mm, 300x300mm
- 400x200mm, 400x300mm, 400x400mm
- 600x400mm
- 700x400mm
- 800x400mm

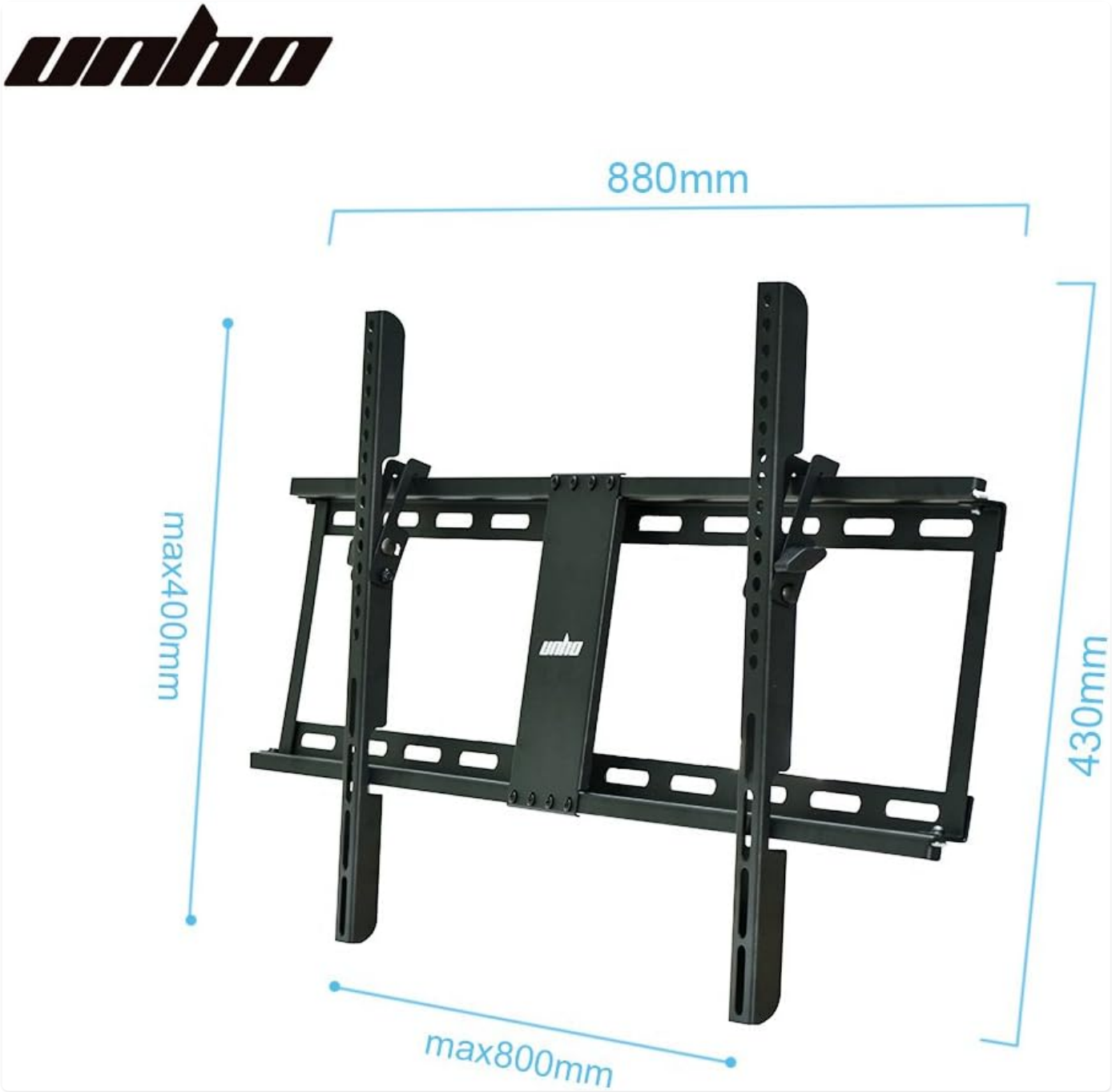

Image: Technical drawing showing the maximum dimensions of the UNHO TV wall mount: 880mm width, 430mm height, and maximum VESA 800x400mm.

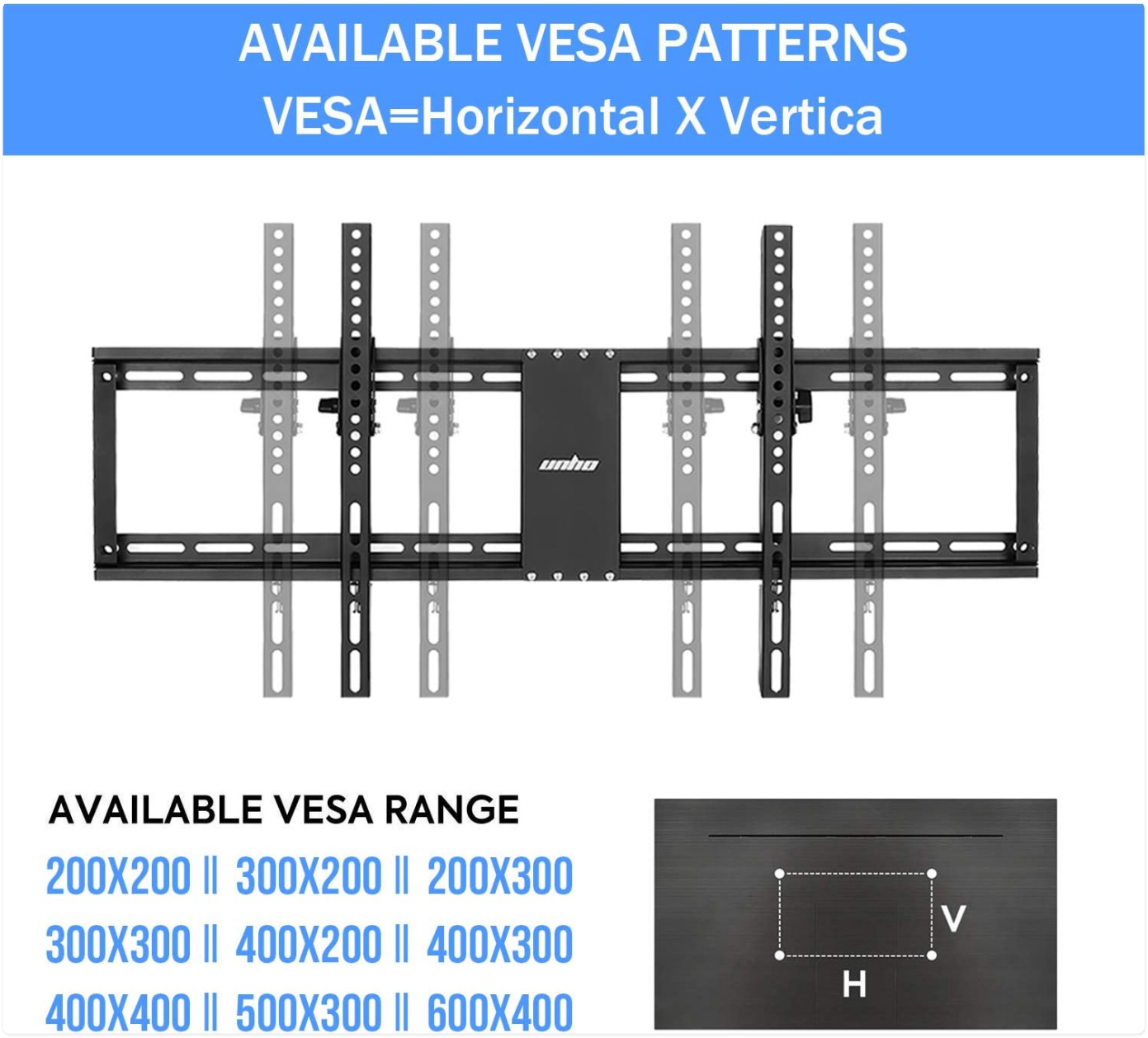

Image: Diagram illustrating various VESA mounting patterns supported by the UNHO TV wall mount, ranging from 200x200 to 800x400.

Warranty and Support

For warranty information or technical support, please contact UNHO customer service through the retailer where you purchased the product or visit the official UNHO brand store online. Please have your model number (AU-U-C8213) and purchase details ready when contacting support.

UNHO is committed to providing practical and elegant solutions for your home. For more products and information, visit the UNHO Brand Store.

© 2024 UNHO. All rights reserved.

Ask a question about this manual

Ask about setup, troubleshooting, compatibility, parts, safety, or missing instructions. Manuals+ will review the question and use this page's manual context to help answer it.

Name

Anonymous

Email

you@example.com

After a successful submission, we securely hash the supplied account or form email before sending it to Microsoft Advertising for conversion attribution. Privacy details.

Question

Example: How do I reset this device or fix this error?

Details

Model number, symptoms, what you tried, or the section of the manual you are using.

Submit question

Open the live page

https://manuals.plus/asin/B07HMV8K36

More documents and user manuals: **https://manuals.plus/**