Saved from manuals.plus.
Open the live page for links to other documents and user manuals.

WAC Lighting R2ARWT-A830-WT

WAC Lighting Aether 2in Round Wall Wash Light Engine Trim & LED

Model: R2ARWT-A830-WT

Introduction

This manual provides essential instructions for the safe installation, operation, and maintenance of your WAC Lighting Aether 2-inch Round Wall Wash Light Engine Trim with integrated LED. Please read this guide thoroughly before installation and retain it for future reference.

Safety Information

WARNING: Risk of electric shock. Disconnect power at the circuit breaker before installation or servicing. All electrical connections must be in accordance with local and national electrical code (NEC) standards. If you are unfamiliar with proper electrical wiring connections, consult a qualified electrician.

- Do not install near combustible materials.
- Ensure all connections are secure and properly insulated.
- This product is designed for indoor and outdoor use, as specified.
- Do not modify the fixture. Any modifications may void the warranty and create safety hazards.
- Proposition 65 Warning: This product may contain chemicals known to the State of California to cause cancer and birth defects or other reproductive harm.

Package Contents

Verify that all components are present before beginning installation:

- Aether 2in Round Wall Wash Light Engine Trim & LED
- Mounting Hardware
- Instruction Manual (this document)

Setup and Installation

This LED trim is designed for use with WAC Lighting New Construction Housings:**HR-2LED-H13A** or **HR-2LED-H13AC**. Installation requires assembly and ceiling mounting.

1. **Prepare the Housing:** Ensure the compatible housing (HR-2LED-H13A or HR-2LED-H13AC) is properly installed

in the ceiling according to its own instruction manual.

2. **Power Disconnection:** Before proceeding, ensure power to the circuit is turned OFF at the main electrical panel.
3. **Connect Wiring:** Carefully connect the electrical wires from the LED trim to the corresponding wires in the housing. Follow standard wiring practices: black to black (live), white to white (neutral), and green or bare copper to ground. Secure connections with wire nuts.
4. **Insert Trim:** Gently push the LED trim into the housing opening until the springs or clips engage and hold the trim flush with the ceiling surface. The ultra-low profile design (2.5 inches housing height for 2-inch trim) allows for installation in tight plenums.
5. **Secure Trim:** Ensure the trim is securely seated and flush.
6. **Restore Power:** Once installation is complete, restore power at the circuit breaker.

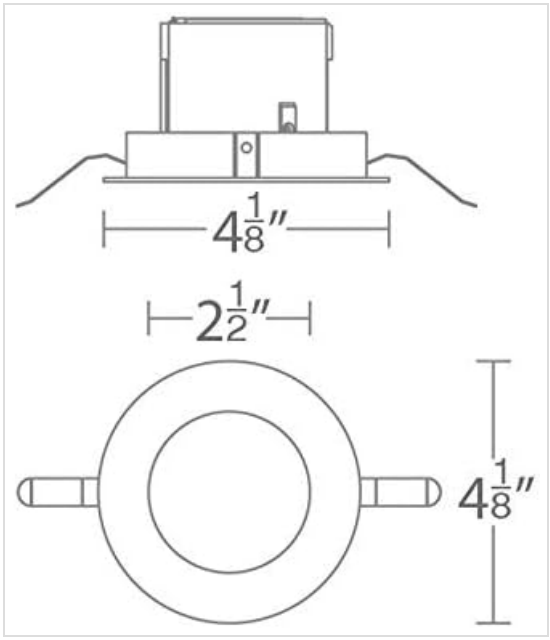

Image: Dimensional diagram of the Aether 2-inch round wall wash light engine trim, illustrating its compact design and mounting points. The diagram shows a top-down view with a 4 1/8 inch diameter and a side view indicating a 2 1/2 inch depth for the light engine.



Image: A close-up front view of the WAC Lighting Aether 2-inch Round Wall Wash Light Engine Trim. The trim is white with a textured

glass lens, and black housing is visible at the top. Two spring clips extend from the sides, used for securing the trim into a recessed housing.

Operating Instructions

The WAC Lighting Aether LED trim is designed for simple operation once installed.

- **Power On/Off:** Control the light fixture using a standard wall switch connected to the circuit.
- **Dimming:** This fixture supports smooth and continuous dimming down to 1%. Use an Electronic Low Voltage (ELV) Dimmer or a 0-10V dimmer for optimal performance. Consult the dimmer manufacturer's instructions for proper wiring and operation.
- **Light Output:** The integrated LED provides up to 1350 lumens of brightness.
- **Color Temperature:** The light engine is available in various color temperatures, including 2700K, 3000K, 3500K, or 4000K. The specific model (R2ARWT-A830-WT) features a 3000 Kelvin color temperature.

Maintenance

Minimal maintenance is required for your LED light engine trim.

- **Cleaning:** Ensure power is off before cleaning. Wipe the trim and lens with a soft, dry, or slightly damp cloth. Do not use abrasive cleaners or solvents, as they may damage the finish or electrical components.
- **LED Module:** The LED light engine is replaceable. If the LED module requires replacement, contact WAC Lighting customer support or a qualified electrician.
- **Rated Hours:** The LED has a rated lifespan of 65,000 hours.

Troubleshooting

If you experience issues with your light fixture, refer to the following common solutions:

Problem	Possible Cause	Solution
Light does not turn on.	No power to the fixture; loose wiring; faulty switch.	Check circuit breaker. Verify all wiring connections are secure. Test the wall switch.
Light flickers or dims improperly.	Incompatible dimmer; loose dimmer wiring; electrical interference.	Ensure an ELV or 0-10V dimmer is used. Check dimmer wiring. Consult an electrician if flickering persists.
Light output is lower than expected.	Dimmer setting too low; incorrect voltage.	Adjust dimmer to maximum setting. Verify correct voltage (120V) is supplied.

If troubleshooting steps do not resolve the issue, contact WAC Lighting customer support.

Specifications

Brand	WAC Lighting
Model Number	R2ARWT-A830-WT
Model Name	Aether LED 2in Round Wall Wash Trim with LED Light Engine

Product Dimensions	4.13"L x 4.13"W x 2.5"H
Item Weight	0.77 Pounds (12.3 ounces)
Material	Aluminum (Fixture), Glass (Shade)
Color	White
Light Source Type	LED
Wattage	15 watts
Voltage	120 Volts
Brightness	1350 Lumens
Color Temperature	3000 Kelvin (Also available in 2700K, 3500K, 4000K)
CRI	85-90
Rated Hours	65,000 Hours
Dimming	Smooth and continuous to 1% with ELV or 0-10V dimmer
Mounting Type	Ceiling Mount (Recessed)
Special Feature	Heavy Duty, Ultra-low profile design
Certification	Energy Star
UPC	790576661728

Warranty

This WAC Lighting product is covered by a**2-year limited manufacturer's warranty**. This warranty covers defects in materials and workmanship under normal use. Please retain your proof of purchase for warranty claims. For full warranty details, please refer to the official WAC Lighting warranty policy or contact customer support.

Support

For technical assistance, replacement parts, or warranty inquiries, please contact WAC Lighting customer support. You can find contact information on the official WAC Lighting website or through your retailer.
WAC Lighting Website: www.waclighting.com

© 2024 WAC Lighting. All rights reserved. Information subject to change without notice.

Ask a question about this manual

Ask about setup, troubleshooting, compatibility, parts, safety, or missing instructions. Manuals+ will review the question and use this page's manual context to help answer it.

Name

Anonymous

Email

you@example.com

After a successful submission, we securely hash the supplied account or form email before sending it to Microsoft Advertising for conversion attribution. Privacy details.

Question

Example: How do I reset this device or fix this error?

Details

Model number, symptoms, what you tried, or the section of the manual you are using.

Submit question

Open the live page

https://manuals.plus/asin/B07HGVQ6K4

More documents and user manuals: **https://manuals.plus/**