Manuals+

Q & A | Deep Search | Upload

CNCTOPBAOS 3018ER11

CNCTOPBAOS 3 Axis 3018 CNC Router User Manual

Model: 3018ER11 | Brand: CNCTOPBAOS

Introduction

This manual provides comprehensive instructions for the assembly, operation, and maintenance of your CNCTOPBAOS 3 Axis 3018 CNC Router. This DIY mini desktop engraving machine is designed for carving, milling, and cutting various materials including aluminum, acrylic, PCB, PVC, and wood. It features a GRBL offline controller for convenient operation. Please read this manual thoroughly before use to ensure safe and efficient operation.

Product Overview & What's in the Box

The CNCTOPBAOS 3018 CNC Router comes as a kit requiring assembly. The package includes the main machine components, a GRBL 1.1F control board, an offline hand controller with SD card, a 775 spindle motor, drill bits, an ER11 collet, a power supply, plate clamps, and a 4G U disk containing the user manual, installation drivers, and GRBL software.

Figure 4: Bottom view of the CNC Router showing the lead screw mechanism.

This view from underneath the CNC router highlights the lead screw mechanism responsible for precise movement along the axes. Proper installation and alignment of the lead screws are essential for accurate carving and milling operations.

Driver Installation

The 4G U disk provided includes necessary drivers for Windows XP, SP3, Win 7, Win 8, and Win 10 (32/64 bit). Install these drivers before connecting the machine to your computer via the USB port.

Safety Precautions

CNC machines are inherently hazardous. Always turn off the power to the spindle when working around the spindle, such as changing bits or adjusting the workpiece. Observe all safety precautions that came with your CNC machine, including the wear of safety goggles, appropriate clothing, and gloves. If you are new to CNC, always prioritize safety and familiarize yourself with the machine's operation before attempting complex tasks.

Your browser does not support the video tag.

Video 1: Overview of the 3018 CNC Router by L-STAR MOTOR. This video demonstrates the machine's components and basic functionality, providing a visual guide for setup and initial inspection.

Operating Instructions

The CNCTOPBAOS 3018 CNC Router can be operated via a computer using GRBL control software (such as Candle or UniversalGcodeSender) or through the included offline controller.

Offline Controller Operation

The offline controller supports SD and TF cards (standard 1G capacity included). It allows direct control of the machine without a computer connection. The menu page allows selection between machine control (Ctrl) and file operations (File). The control page enables moving axes (X±, Y±, Z±) and spindle control (OK/Spindle). Step size can be changed using Exit/Step. To adjust spindle power, press OK and Z+ (increase) or Z- (decrease) simultaneously. The file page allows selecting G-code files (.nc/.txt/.tape/.gcode) for engraving. Long press Exit to stop machining.

Figure 5: User interface of the GRBL Offline Controller.

This image details the various screens and buttons on the offline controller, including the menu, control, and file pages. It illustrates how to navigate the interface to control machine movements, spindle operation, and file selection for engraving tasks.

Your browser does not support the video tag.

Video 2: Demonstration of the CNC Router's operation using the offline controller. This video shows the machine's axes moving and the spindle operating, controlled directly from the handheld unit.

Computer Software Operation

The machine supports GRBL controller software on Windows XP, SP3, Win 7, Win 8, and Win 10. The software allows for precise control, G-code loading, and monitoring of the machine's status. Ensure the serial cable is connected to your controller and select the correct COM port in the software. If using the offline controller, disconnect it from the machine before connecting to a computer, and vice-versa.

Figure 6: Screenshot of the GRBL Control Software interface.

This image showcases the GRBL control software interface, displaying machine coordinates, control buttons for axis movement, spindle control, and a console for G-code commands and messages. This software is essential for advanced control and precise machining.

Your browser does not support the video tag.

Video 3: Detailed introduction to the CNC 3018 Pro Ver software. This video provides a comprehensive walkthrough of the software interface, connection procedures, and various settings for controlling the CNC machine.

Supported Materials

The CNC router can engrave plastic, wood, acrylic, PVC, PCB, and similar materials. It can also work with soft metals like copper and aluminum. Note that it cannot carve hard metals, jade, or other very hard textures. If you change the spindle to a laser module (not included), you can also carve kraft paper, leather, and bamboo.

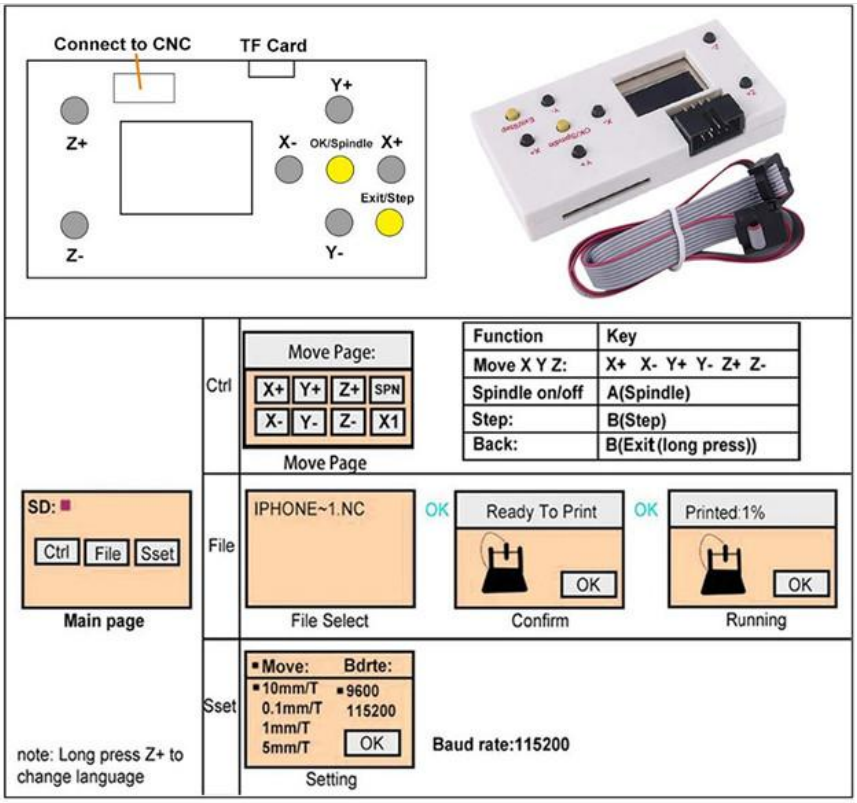

Figure 7: Various materials and engraving examples.

This image showcases the versatility of the CNC router by displaying various materials like MDF, PCB, acrylic, wood, leather, and rubber, along with examples of engraved or cut designs on each. It also illustrates the use of different bits for specific tasks.

Maintenance

Regular maintenance ensures the longevity and precision of your CNC router. Keep the machine clean from dust and debris, especially around the lead screws and linear rails. Periodically check all bolts and connections for tightness, as vibrations during operation can cause them to loosen. Lubricate moving parts as recommended in the detailed user manual on the provided U disk to ensure smooth operation and prevent wear.

Troubleshooting

Common issues may include loose parts, which can affect accuracy and machine stability. Always ensure all components are securely fastened. If you experience issues with the control board or software, refer to the troubleshooting section on the provided U disk. Some users have reported issues with parts length or machining quality; in such cases, contacting customer support or referring to community forums for solutions may be helpful.

Specifications

- **Model:** 3018ER11
- **Working Area:** 11.8 x 7.1 x 1.8 inches (30 x 18 x 4.5 cm)
- **Frame Size:** 15.7 x 12.9 x 9.44 inches (40 x 33 x 24 cm)
- **Port:** USB port
- **Support System:** Windows XP, SP3, Win 7, Win 8, Win 10 (32/64 bit)
- **Control Board:** Upgraded GRBL 1.1F (with outer shell, E-stop, probe, limit ports, power button, fan)
- **Spindle Motor:** 775 100W (24-36V) DC24V: 10000 r/min (max 20000rpm spindle supported by enhanced drive)
- **Collet:** ER11 3.175mm (Can be equipped with 0-7mm)
- **Stepper Motor:** Nema17 42 stepper motor 34MM, 1.33A, 0.25N.M
- **Software:** GRBL Control, Candle, UniversalGcodeSender
- **Supporting Files:** G-code (.nc/.txt/.tape/.gcode...)

- **Material:** Aluminum Alloy
- **Power Supply:** DC 24V 5.6A power adapter (input voltage 110-240VAC)
- **Item Weight:** 16.42 pounds (7.46 Kilograms)
- **UPC:** 681385630947

Warranty & Support

For warranty information, technical support, or service inquiries, please refer to the documentation on the provided 4G U disk or visit the CNCTOPBAOS store page on Amazon. CNCTOPBAOS is committed to providing strong technical support and perfect after-sales service for their products.
Protection plans are available for purchase separately:

- 3-Year Protection Plan
- 4-Year Protection Plan
- Complete Protect: One plan covers all eligible past and future purchases (monthly subscription)