Saved from manuals.plus.
Open the live page for links to other documents and user manuals.

Whirlpool W11025157

Whirlpool W11025157 Dishwasher Pump and Motor Instruction Manual

Model: W11025157 | Brand: Whirlpool

1. Introduction

The Whirlpool W11025157 Dishwasher Pump and Motor is a genuine Original Equipment Manufacturer (OEM) replacement part designed for specific Whirlpool, Kenmore, and IKEA dishwasher models. This component is crucial for the proper circulation and drainage of water within your dishwasher, ensuring effective cleaning and operation. This manual provides essential information for understanding, installing, and maintaining this replacement part.

2. Product Overview

This assembly includes the dishwasher pump and motor, factory certified by Whirlpool Corporation. It is designed to restore the washing and draining functions of your dishwasher when the original pump and motor assembly fails.

2.1 What's in the Box

- Single Whirlpool W11025157 Dishwasher Circulation Pump + Motor Assembly

2.2 Product Images



Figure 1: Front view of the Whirlpool W11025157 Dishwasher Pump and Motor Assembly, showing the main pump housing and motor unit.

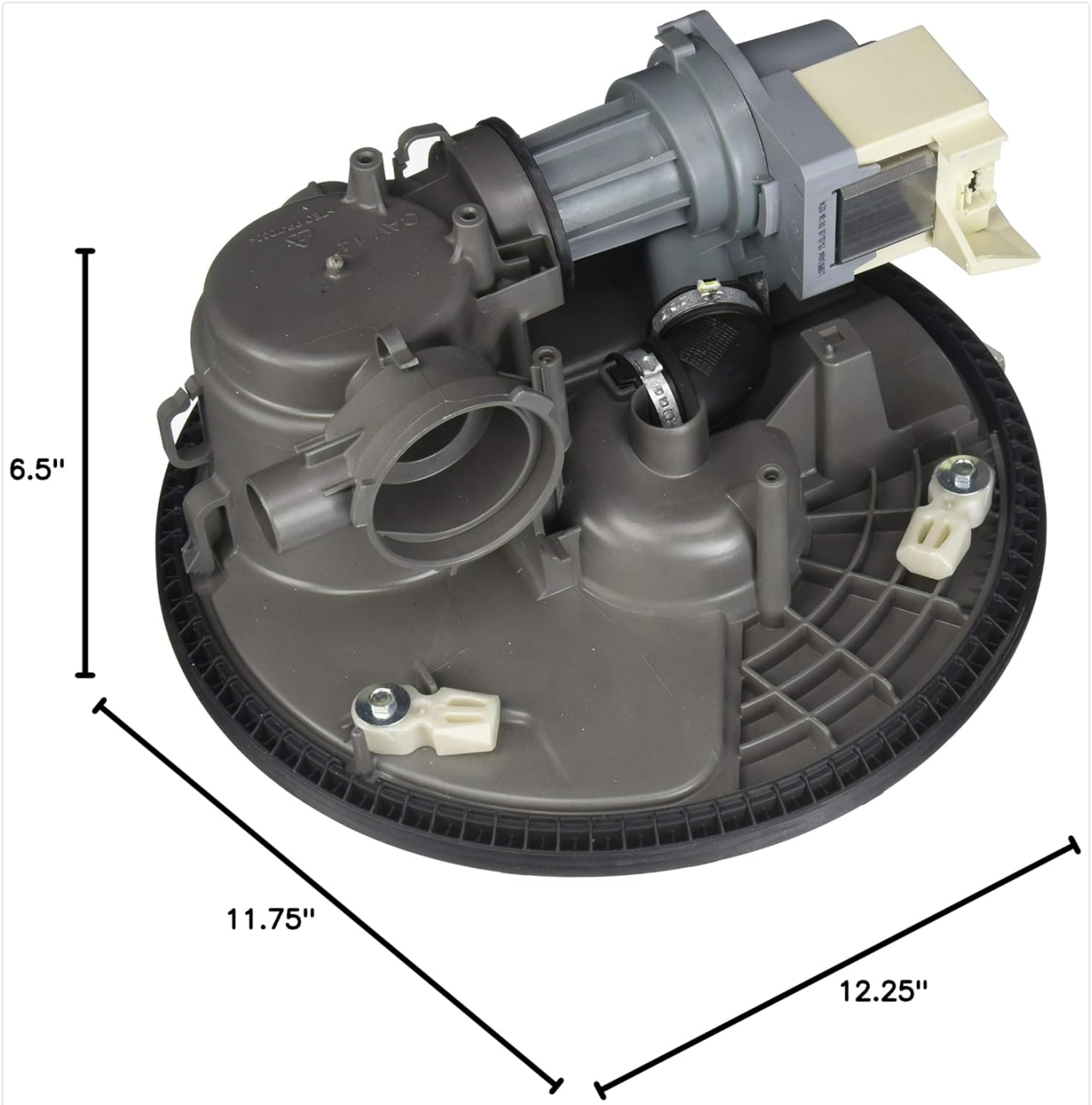

Figure 2: View of the Whirlpool W11025157 Dishwasher Pump and Motor Assembly with approximate dimensions: 12.25"L x 11.75"W x 6.5"H.

3. Specifications

Attribute	Value
Brand	Whirlpool
Model Info	W11025157
Part Number	W11025157
Color	Black

Attribute	Value
Material	Multi-Material
Product Dimensions (L x W x H)	12.25" x 11.75" x 6.5"
Item Weight	3.33 pounds
Power Source	AC/DC
Manufacturer	Whirlpool
UPC	728834785305

4. Installation / Setup

Replacing a dishwasher pump and motor assembly requires technical knowledge and careful handling. It is highly recommended that this installation be performed by a qualified appliance technician. If you choose to proceed with self-installation, please follow these general guidelines and prioritize safety.

4.1 Safety Precautions

- **Disconnect Power:** Always unplug the dishwasher from the electrical outlet or turn off the circuit breaker before beginning any work.
- **Turn Off Water Supply:** Close the water supply valve to the dishwasher.
- **Drain Water:** Ensure all water is drained from the dishwasher tub and hoses before disconnecting components.
- **Wear Protective Gear:** Use gloves and eye protection to prevent injury.

4.2 General Installation Steps

1. **Access the Pump/Motor:** Depending on your dishwasher model, you may need to pull the dishwasher out from under the counter or access the component from the bottom. Consult your specific dishwasher's service manual for detailed access instructions.
2. **Disconnect Hoses and Wiring:** Carefully disconnect all water hoses, drain hoses, and electrical wiring connected to the old pump and motor assembly. Note their positions for reassembly.
3. **Remove Old Assembly:** Unfasten any clamps, screws, or clips securing the old pump and motor assembly to the dishwasher tub or base. Remove the old unit.
4. **Prepare New Assembly:** Inspect the new Whirlpool W11025157 assembly for any damage. Ensure all seals and gaskets are properly seated.
5. **Install New Assembly:** Position the new pump and motor assembly and secure it using the appropriate fasteners. Ensure a tight, leak-free fit.
6. **Reconnect Hoses and Wiring:** Reattach all water hoses, drain hoses, and electrical wiring to their correct positions. Double-check all connections for security.
7. **Test for Leaks:** Before fully reinstalling the dishwasher, turn on the water supply and briefly run a cycle to check for any leaks. Address any leaks immediately.
8. **Restore Power:** Once satisfied with the installation and leak check, restore electrical power to the dishwasher.

Note: This is a general guide. Specific steps and tools may vary based on your dishwasher's make and model. Always refer to your dishwasher's official service manual for precise instructions.

5. Operating Instructions

Once the Whirlpool W11025157 Dishwasher Pump and Motor is correctly installed, your dishwasher should resume normal operation. The pump and motor function automatically as part of the dishwasher's wash and drain cycles. No direct user interaction with the pump and motor itself is required during normal operation.
Ensure your dishwasher is loaded correctly and detergent is added as per your dishwasher's user manual. Select the desired wash cycle, and the new pump and motor will facilitate water circulation for cleaning and drainage at the appropriate times.

6. Maintenance

While the pump and motor assembly itself requires no routine maintenance, proper care of your dishwasher can help prolong the life of all its components, including the pump and motor.

- **Regular Cleaning:** Periodically clean the dishwasher's filter and spray arms to prevent food particles and debris from accumulating and potentially obstructing the pump.
- **Pre-Rinsing:** Scrape large food particles off dishes before loading them into the dishwasher to reduce strain on the pump and prevent clogs.
- **Proper Loading:** Avoid overloading the dishwasher, which can impede water circulation and put undue stress on the pump.
- **Use Appropriate Detergent:** Use only dishwasher-safe detergents and rinse aids as recommended by your dishwasher manufacturer.

7. Troubleshooting

If you experience issues after installing the new pump and motor, consider the following common troubleshooting steps:

Symptom	Possible Cause / Solution
Dishwasher not draining	Check for kinks in the drain hose. Ensure the drain pump is clear of obstructions. Verify electrical connections to the pump.
No water circulation / Poor wash performance	Ensure water supply is on. Check for clogs in spray arms or filters. Verify electrical connections to the circulation pump motor.
Loud noises during operation	Inspect for foreign objects in the pump housing. Ensure the pump and motor assembly is securely mounted and not vibrating against other components.
Water leaks from dishwasher base	Check all hose connections for tightness. Ensure the pump assembly's gasket is properly seated and not damaged.

If troubleshooting steps do not resolve the issue, it is advisable to contact a certified appliance technician for further diagnosis and repair.

8. Warranty and Support

Specific warranty information for the Whirlpool W11025157 Dishwasher Pump and Motor is typically provided at the point of purchase or directly by Whirlpool Corporation. Please retain your proof of purchase for warranty claims.
For technical support, installation assistance, or to inquire about warranty coverage, please contact Whirlpool customer service or visit their official website. Always provide your product model number (W11025157) and the serial number of your dishwasher when seeking support.

© 2025 Whirlpool Corporation. All rights reserved.

Ask a question about this manual

Ask about setup, troubleshooting, compatibility, parts, safety, or missing instructions. Manuals+ will review the question and use this page's manual context to help answer it.

Name

Anonymous

Email

you@example.com

After a successful submission, we securely hash the supplied account or form email before sending it to Microsoft Advertising for conversion attribution. Privacy details.

Question

Example: How do I reset this device or fix this error?

Details

Model number, symptoms, what you tried, or the section of the manual you are using.

Submit question

Open the live page

https://manuals.plus/asin/B073DBNW59

More documents and user manuals: **https://manuals.plus/**