Saved from manuals.plus.
Open the live page for links to other documents and user manuals.

Lightronic 2*1918-S

Lightronic 3.5" Round Pedestal Mount Cool-White Spot Beam LED Fog & Driving Light Instruction Manual

Model: 2*1918-S | Brand: Lightronic

1. Introduction

This manual provides comprehensive instructions for the installation, operation, and maintenance of your Lightronic 3.5-inch Round Pedestal Mount Cool-White Spot Beam LED Fog and Driving Lights. Please read this manual thoroughly before installation and use to ensure proper function and safety.

Safety Information:

- Always disconnect the vehicle's battery before performing any electrical work.
- Ensure all wiring connections are secure and properly insulated to prevent short circuits.
- Mount lights securely to prevent vibration and detachment during vehicle operation.
- Verify local regulations regarding auxiliary lighting before installation.

2. Package Contents

Verify that all components are present in your package:

- 2 x Lightronic 3.5" Round LED Light Pods
- 2 x Pedestal Mounting Brackets
- Mounting Hardware (bolts, nuts, washers)



Image 2.1: Contents of the Lightronic LED Light Kit, showing one light pod, its pedestal mounting bracket, and associated bolts, nuts, and washers.

3. Setup and Installation

3.1 Pre-Installation Check

Before beginning installation, ensure the vehicle's power is off and the battery is disconnected. Plan the mounting location and wiring path.

3.2 Mounting the Lights

1. Select a suitable mounting surface on your vehicle (e.g., bumper, grille guard, roof rack).
2. Attach the pedestal mounting bracket to the light pod using the provided hardware.
3. Secure the assembled light and bracket to the chosen mounting location on your vehicle. Ensure the mount is stable and the light is aimed correctly.

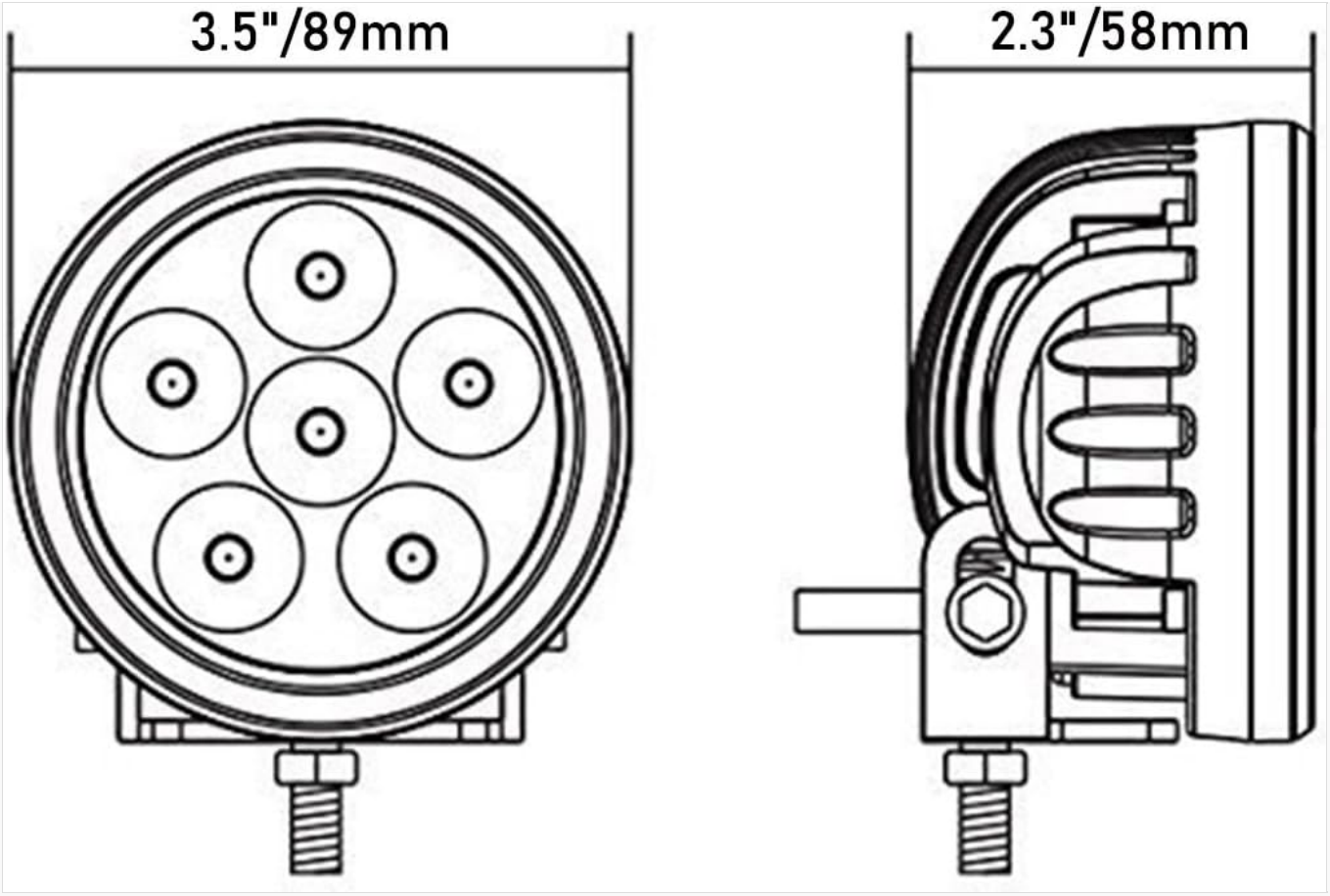

Image 3.1: Dimensional diagram of the Lightronic 3.5-inch round LED light, showing a diameter of 89mm (3.5 inches) and a depth of 58mm (2.3 inches).

3.3 Wiring Instructions

The lights are designed for 12V/24V DC systems. Each light has a positive (+) and negative (-) wire. It is recommended to use a wiring harness with a relay and fuse (not included) for optimal performance and protection.

1. Connect the positive wire of the LED light to the positive output of your wiring harness or switch.
2. Connect the negative wire of the LED light to a suitable ground point on the vehicle chassis.
3. Ensure all connections are tight and protected from moisture and abrasion.



Image 3.2: Rear view of the Lightronic LED light, highlighting the heat sink design for thermal management and the robust power cable connection.

4. Operating Instructions

Once installed and wired correctly, the Lightronic LED lights can be operated via the connected switch. These lights are designed as auxiliary lighting for off-road use or to supplement existing vehicle lighting.

- **Spot Beam:** The 10° spot beam pattern provides focused, long-range illumination, ideal for driving lights to see further down trails or roads.

- **Fog Light Application:** When used as fog lights, ensure they are mounted low on the vehicle (typically below the bumper) to minimize glare and effectively illuminate the road surface in adverse conditions.



Image 4.1: Examples of Lightronic LED lights installed on various vehicles, demonstrating their versatility as auxiliary lighting on bumpers, roof racks, and motorcycles.

5. Maintenance

The Lightronic LED lights are designed for durability and minimal maintenance. Follow these guidelines to ensure longevity:

- **Cleaning:** Clean the lens and housing periodically with a soft cloth and mild soap and water. Avoid abrasive cleaners that could scratch the polycarbonate lens.
- **Inspection:** Regularly check mounting hardware for tightness and wiring for any signs of wear or damage.
- **Waterproof Rating:** The lights have an IP69 waterproof rating, indicating high resistance to dust and water ingress. However, avoid directing high-pressure water jets directly at the wiring connections.

6. Troubleshooting

If you encounter issues with your Lightronic LED lights, refer to the following troubleshooting steps:

- **Light Not Turning On:**
  - Check all wiring connections for looseness or corrosion.
  - Verify that the vehicle's battery has sufficient charge.
  - Inspect the fuse in the wiring circuit; replace if blown.
  - Test the switch for proper function.
- **Dim or Flickering Light:**
  - Ensure proper voltage supply (12V/24V DC). Low voltage can cause dimming.
  - Check for poor ground connection.
  - Inspect wiring for damage or partial breaks.
- **Moisture Inside Lens:**
  - While rated IP69, extreme temperature changes can sometimes cause condensation. This usually dissipates with use. If persistent, inspect the housing for damage.

7. Specifications

Feature	Specification
Wattage	18 Watt per Light
Voltage	12V/24V DC
Current Draw	1.0A@12V, 0.5A@24V
Color Temperature	Cool-White (6000K)
Lumen Output	1,800 lm
Beam Pattern	Spot (10°)
Shape	3.5" Round
Mounting Type	Pedestal Bolt-on
Material	Polycarbonate Lens, Die-Cast Aluminum Housing, Stainless Steel Bracket
Waterproof Rating	IP69
Product Height w/ Bracket	3.5 in. (89 mm)
Product Depth	2.28 in. (58 mm)
Product Diameter	3.5 in. (89 mm)
Lifespan	30,000 hours

8. Warranty and Support

Lightronic provides a **2-Year Quality Warranty** for this product, covering manufacturing defects and material flaws under normal use. Please retain your proof of purchase for warranty claims.
For technical support, warranty claims, or further inquiries, please contact Lightronic customer service through the retailer where the product was purchased or visit the official Lightronic website for contact information.

© 2025 Lightronic. All rights reserved.

Ask a question about this manual

Ask about setup, troubleshooting, compatibility, parts, safety, or missing instructions. Manuals+ will review the question and use this page's manual context to help answer it.

Name

Anonymous

Email

you@example.com

After a successful submission, we securely hash the supplied account or form email before sending it to Microsoft Advertising for conversion attribution. Privacy details.

Question

Example: How do I reset this device or fix this error?

Details

Model number, symptoms, what you tried, or the section of the manual you are using.

Submit question

Open the live page

https://manuals.plus/asin/B071XND8VJ

More documents and user manuals: **https://manuals.plus/**