Saved from manuals.plus.
Open the live page for links to other documents and user manuals.

Samsung SHS-2920

Samsung SHS-2920 EX Smart Door Lock User Manual

Model: SHS-2920

1. Introduction

This manual provides detailed instructions for the installation, operation, and maintenance of your Samsung SHS-2920 EX Smart Door Lock. Please read this manual thoroughly before using the product to ensure proper function and safety. Keep this manual for future reference.

2. Product Features

- **RF Auto Polling Function:** Automatic detection mode for quick access without a wake-up step.
- **Random Security Code Feature:** Enhances security by requiring a two-digit random number input before the main password.
- **Slim and Modern Design:** Features a high-glossy body frame and a slim profile of 16.5mm.
- **One-Touch Security Setup:** Activates enhanced security mode by pressing a button before leaving, triggering an alarm for forced entry or repeated authentication failures.
- **Password and Smart Card Double Authentication Mode:** Requires both a password and a key-tag for door access, providing additional security.
- **Keypad Volume Control:** Allows adjustment of keypad sound volume for user convenience.
- **Emergency Power Supply Feature:** Enables temporary power supply using a 9V battery in case of main battery depletion.
- **Silent Mode:** Allows quiet operation of the lock, useful for late-night entry or when quiet is required.
- **Battery Dead Alarm:** Notifies the user through a specific melody or keypad LED when batteries are low.
- **Abnormal High Temperature Warning:** Triggers an alarm and automatically opens the door if abnormally high temperatures are detected inside the home.
- **Prank Warning:** Activates an alarm and temporarily disables the lock after multiple incorrect password attempts.
- **Away Mode for Long-Term Leave:** Activates enhanced security when leaving for an extended period.



Figure 2.1: Key features of the Samsung SHS-2920 EX Smart Door Lock, highlighting its design and interface.

Randomizer

Before you enter your password, you are guided to push two random numbers to prevent the password from being inferred based on the fingerprints on the frequently pushed numbers and from being seen by anyone nearby



Away mode for long-term leave

If you go out frequently or leave the home for





Figure 2.2: Visual representation of advanced security and user-friendly functions.

3. Setup and Installation

3.1 Door Thickness Requirements

The Samsung SHS-2920 EX Smart Door Lock is designed for doors with a thickness between 35mm and 80mm.

3.2 Product Dimensions

- **Out-body Dimension:** 67 mm (W) x 157.1 mm (H) x 16.5 mm (D)
- **In-body Dimension:** 158 mm (W) x 89 mm (H) x 44.5 mm (D)

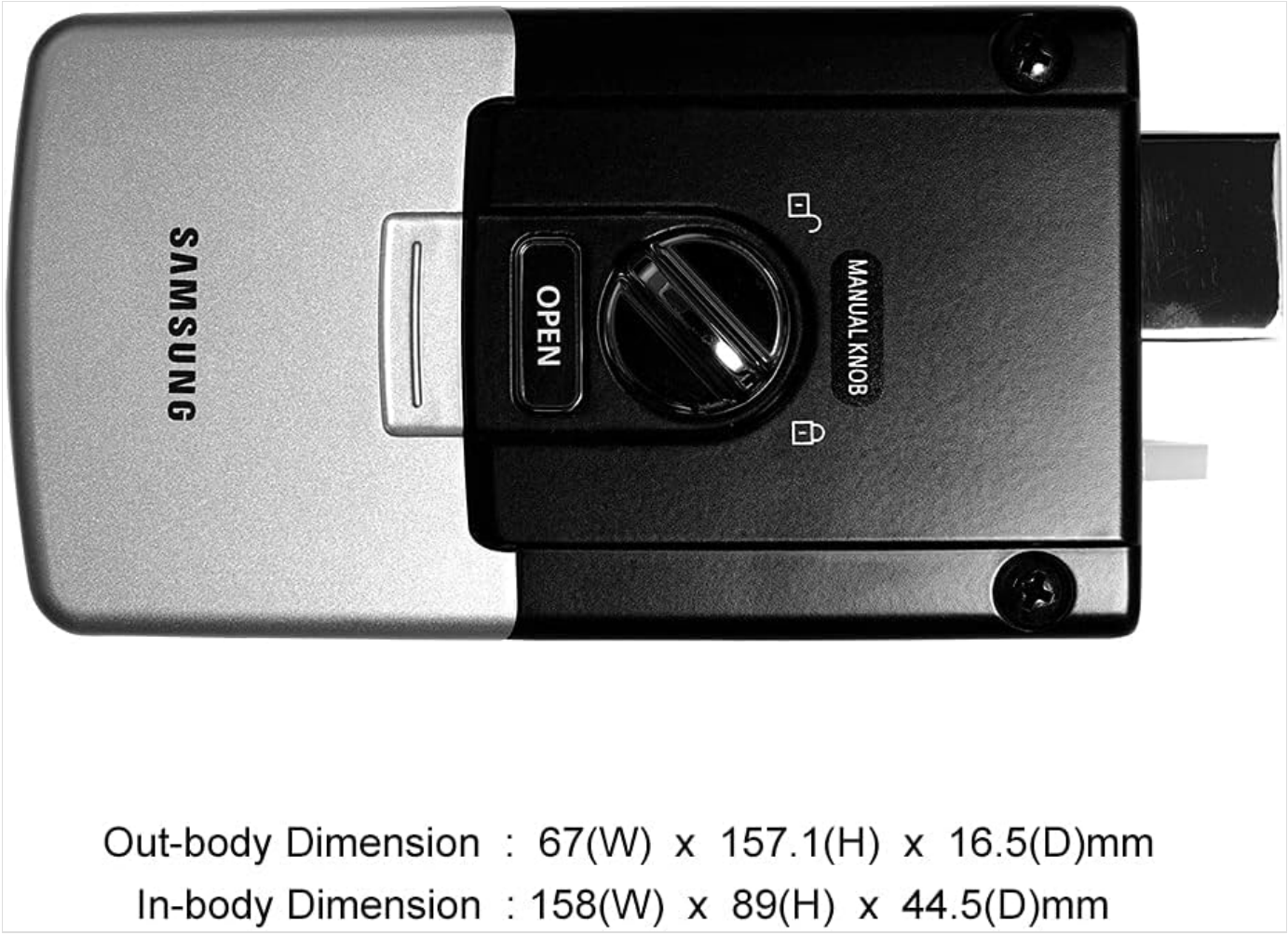

Figure 3.1: Exterior and interior unit dimensions.

3.3 Installation Overview

Installation requires careful attention to door preparation and component assembly. Refer to the detailed installation manual included with your product for step-by-step instructions and template guides.

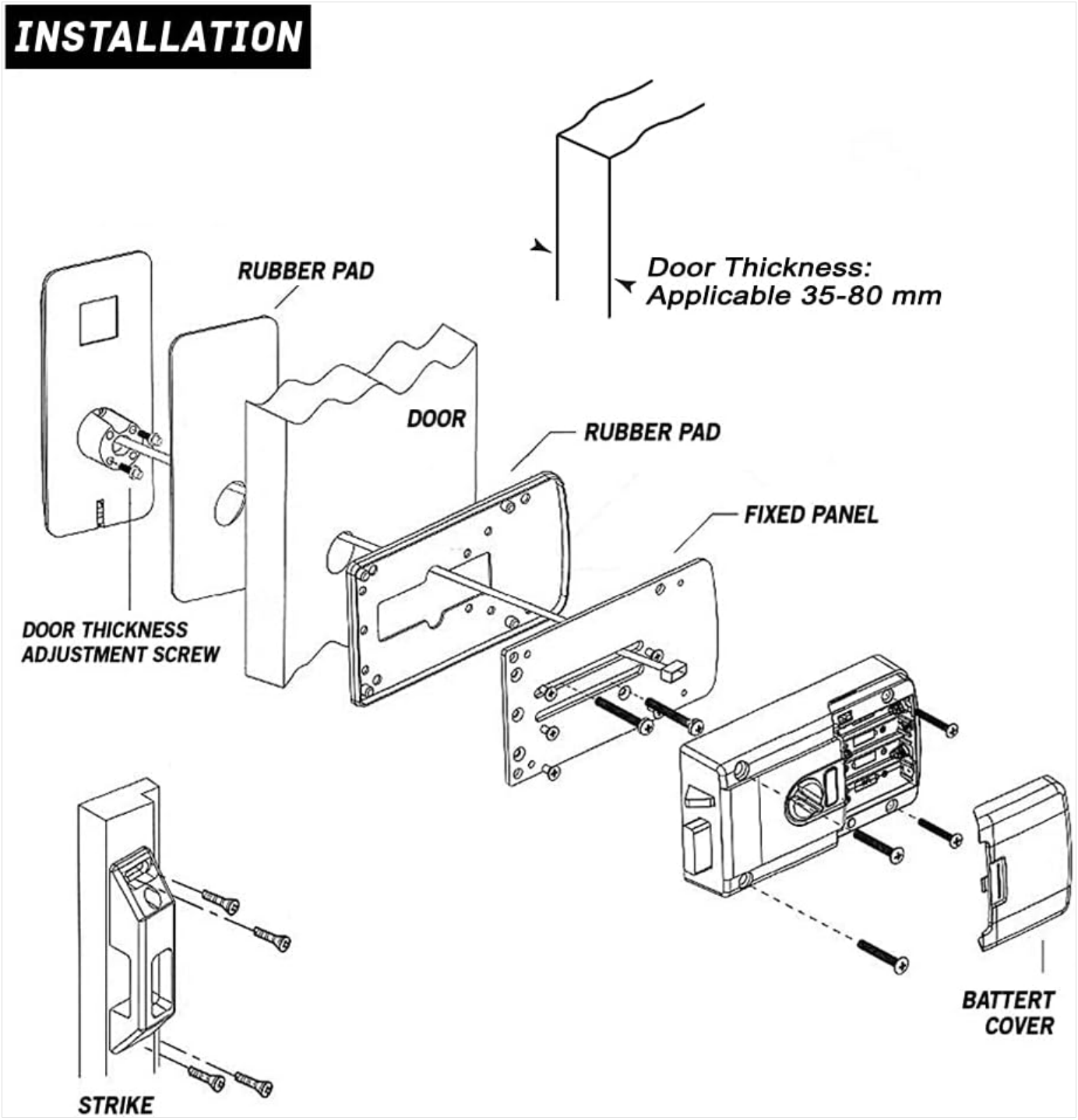

Figure 3.2: Exploded view of the lock components and installation sequence.



Figure 3.3: Example of the smart door lock installed on a door.

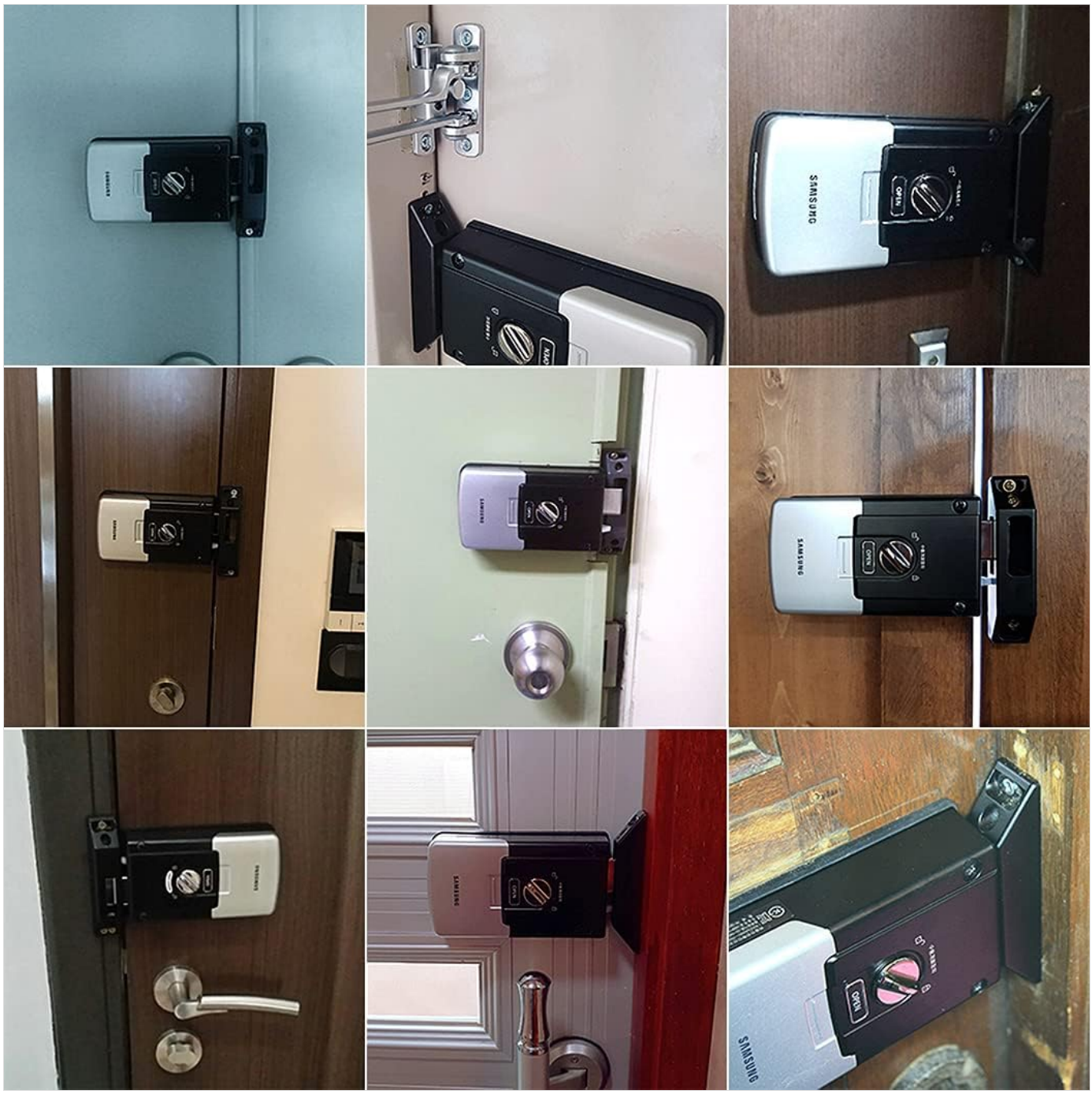

Figure 3.4: Various installation examples on different door types.

4. Operating Instructions

4.1 Accessing the Door

- **Using a Password:** Enter your 4 to 12 digit password on the keypad. For enhanced security, the random security code feature may require you to input two random digits before your main password.
- **Using an RF ID KeyTag:** Present a registered RF ID KeyTag to the sensor area on the lock. The lock supports up to 20 RF ID KeyTags.
- **Double Authentication Mode:** If enabled, both a password and an RF ID KeyTag are required for access.

4.2 Security Functions

- **One-Touch Security Setup:** Press the security button on the lock before leaving to activate enhanced security.

- **Away Mode:** Activate this mode for long-term absences to enhance security.

4.3 Convenience Features

- **Keypad Volume Control:** Adjust the volume of keypad sounds as needed.
- **Silent Mode:** Activate this mode to silence keypad sounds for quiet entry or exit.

5. Maintenance

5.1 Battery Replacement

The lock requires 4 AA Alkaline batteries (1.5V, LR6). When the battery dead alarm sounds, replace all four batteries promptly. Expected battery life is approximately 10 months with ten uses per day.

5.2 Emergency Power Supply

In case the batteries are completely depleted, you can temporarily power the lock using a 9V battery (6LF22). Connect the 9V battery to the emergency power terminal on the lock's exterior unit to gain access and then replace the internal AA batteries.

6. Troubleshooting

- **Battery Dead Alarm:** If the alarm sounds, replace the 4 AA batteries immediately.
- **Abnormal High Temperature Warning:** If the lock detects high temperatures, an alarm will sound, and the door will automatically unlock for safety.
- **Prank Warning / Repeated Incorrect Entries:** If an incorrect password is entered multiple times, the lock will sound an alarm and temporarily disable access. Wait for the specified duration before attempting to enter the password again.
- **Forced Entry Attempts:** The lock will trigger an alarm if it detects attempts at forced entry.

7. Specifications

Access Code Capacity	1 (4-12 digit number combination)
RF ID Capacity	20 (14443A type, 13.56MHz)
Exterior Body Dimensions	67 mm (W) x 157.1 mm (H) x 16.5 mm (D)
Interior Body Dimensions	158 mm (W) x 89 mm (H) x 44.5 mm (D)
Applicable Door Thickness	35-80 mm
Power Source (Standard)	4 AA Alkaline Batteries (1.5V, LR6) (not included)
Power Source (Emergency)	9V Battery (6LF22) (not included)
Battery Life	Approx. 10 Months (based on 10 uses per day)
Material	Metal, Plastic
Color	Black

Special Features	Keyless

Access code

Capacity	1
	4~12 digit number combination

RF ID

Capacity	20
ISO	14443A type(13.56MHz)

Size

Exterior body	67 mm(W) x 157.1 mm(H) x 16.5 mm(D)
Interior body	158 mm(W) x 89 mm(H) x 44.5 mm(D)

Door thickness

35-80mm

Power

Standard: 4 AA Alkaline Batteries (1.5V, LR6) (not included)
Emergency: 9V Battery (6LF22) (not included)

Battery Life

About 10 Months (Ten Times Per Day)

Figure 7.1: Detailed product specifications.

7.1 Included Components

- Samsung SHS-2920 EX Smart Door Lock Unit
- 6 RF KeyTags (2 Keychain Type, 2 Sticker Type, 2 Card Type)
- User Manual (this document)
- Installation Manual
- Installation Template Guide



Figure 7.2: Included RF KeyTags.

8. Warranty and Support

For warranty information and technical support, please refer to the documentation provided at the time of purchase or contact your retailer. You may also visit the official Samsung website for product support resources.

Ask a question about this manual

Ask about setup, troubleshooting, compatibility, parts, safety, or missing instructions. Manuals+ will review the question and use this page's manual context to help answer it.

Name

Anonymous

Email

you@example.com

After a successful submission, we securely hash the supplied account or form email before sending it to Microsoft Advertising for conversion attribution. Privacy details.

Question

Example: How do I reset this device or fix this error?

Details

Model number, symptoms, what you tried, or the section of the manual you are using.

Submit question

Open the live page

https://manuals.plus/asin/B01EFIW7VW

More documents and user manuals: **https://manuals.plus/**