Manuals+
Q & A | Deep Search | Upload

Electro-Harmonix MEL9

Electro-Harmonix MEL9 Tape Replay Machine Pedal User Manual

Model: MEL9

Introduction

The Electro-Harmonix MEL9 Tape Replay Machine Pedal is designed to transform your instrument's sound, replicating the distinctive tones of vintage tape-based keyboards. Utilizing advanced polyphonic technology, the MEL9 offers nine classic Mellotron-inspired sounds, allowing guitarists, bassists, and keyboardists to access a unique sonic palette without modifications to their instruments.
Key features of the MEL9 include:

- Works with guitar without requiring special pickups or MIDI implementation, accurately tracking bends, slides, and whammy dive bombs.
- Compatible with bass guitar down to the open A string, and keyboards within its polyphony (5 notes) and range (A1 to A5).
- Independent Effect and Dry volume controls enable precise mixing of the processed and unprocessed signals.
- A dedicated Dry Output jack provides the input signal at unity gain.
- The Sustain control adjusts the release time of the effect, increasing fade-out time as it is turned clockwise.

Getting Started

Package Contents

- Electro-Harmonix MEL9 Tape Replay Machine Pedal
- Power adapter

Power Supply

The MEL9 requires a 9V DC power supply with a center-negative plug. The pedal operates on 9 volts and requires approximately 100mA of current. Ensure the correct power adapter is used to prevent damage to the unit.

Connections

Connect your instrument to the **INPUT** jack on the right side of the pedal. Connect the **EFFECT OUTPUT** jack to your amplifier or next effect pedal for the processed signal. The **DRY OUTPUT** jack provides your original, unprocessed instrument signal at unity gain, which can be routed to a separate amplifier or signal chain if desired.

Image: The Electro-Harmonix MEL9 pedal, showcasing its input and output jacks, along with the control knobs and preset selector.

Controls and Functions

Image: A detailed view of the MEL9's control knobs and the 9-position preset selector.

DRY VOL Knob: This control adjusts the output volume of your original, unprocessed instrument signal. It is active for both the EFFECT OUTPUT and DRY OUTPUT jacks.

EFFECT VOL Knob: This control adjusts the output volume of the MEL9's processed effect sound. It is active only for the EFFECT OUTPUT jack.

ATTACK Knob: The ATTACK knob controls the fade-in speed of the effect sound. Turning it clockwise increases the time it takes for the effect to reach full volume, creating a softer, more gradual swell. Turning it counter-clockwise results in a faster, more immediate attack.

SUSTAIN Knob: The SUSTAIN knob adjusts the decay time of the effect sound after the input signal stops. Turning it clockwise increases the length of the sustain, allowing the effect to ring out longer. Turning it counter-clockwise shortens the decay.

PRESET Knob: This 9-position rotary switch selects one of the nine distinct Mellotron-inspired instrument sounds.

FOOTSWITCH: This footswitch engages or bypasses the MEL9 effect. When the effect is engaged, the status LED illuminates.

Preset Descriptions

1. **ORCHESTRA:** A rich, full orchestral sound, combining multiple string and brass elements.
2. **CELLO:** Emulates the deep, resonant tone of a cello.
3. **STRINGS:** A classic Mellotron string section sound, ideal for pads and melodic lines.
4. **FLUTE:** Recreates the airy, breathy sound of a flute.
5. **CLARINET:** Provides the distinct, reedy tone of a clarinet.
6. **SAXOPHONE:** A vintage saxophone sound, suitable for lead melodies or harmonies.
7. **BRASS:** A powerful brass section sound.
8. **LOW CHOIR:** A deep, ethereal male choir sound.
9. **HIGH CHOIR:** A bright, angelic female choir sound.

Operation

To begin using your MEL9, ensure it is properly powered and connected as described in the 'Getting Started' section. Start with the DRY VOL and EFFECT VOL knobs at the 12 o'clock position. Select a preset using the PRESET knob. Engage the footswitch to activate the effect.
Experiment with the DRY VOL and EFFECT VOL knobs to find the desired blend between your original instrument sound and the MEL9 effect. Adjust the ATTACK and SUSTAIN knobs to shape the envelope of the effect, creating anything from quick, percussive sounds to long, evolving pads.
The MEL9 is polyphonic, meaning it can process multiple notes simultaneously. For optimal tracking, ensure clean playing technique. For guitarists, using a compressor pedal before the MEL9 can help even out the signal and improve tracking consistency, especially for chords.

Maintenance

The Electro-Harmonix MEL9 pedal is a robust electronic device designed for reliable performance. To ensure its longevity and optimal function, follow these general maintenance guidelines:

- **Cleaning:** Use a soft, dry cloth to clean the pedal's exterior. Avoid abrasive cleaners or solvents, which can damage the finish or internal components.
- **Storage:** Store the pedal in a cool, dry place away from direct sunlight, extreme temperatures, and high humidity.
- **Power:** Always use the specified 9V DC center-negative power adapter. Disconnect power when the pedal is not in use for extended periods.
- **Connections:** Periodically check all cables and jacks for wear or damage. Ensure connections are secure.
- **Avoid Impact:** Protect the pedal from drops or heavy impacts, which can damage internal circuitry or external controls.

Troubleshooting

If you encounter issues with your MEL9 pedal, consider the following troubleshooting steps:

- **No Sound or Weak Effect:**
  - Verify the power adapter is correctly connected and supplying power.
  - Check all instrument cables for proper connection and integrity. Try swapping cables.
  - Ensure the DRY VOL and EFFECT VOL knobs are not set to minimum.
  - Confirm the footswitch is engaged (status LED illuminated).
  - Test the pedal in a simpler signal chain (e.g., instrument directly into MEL9, then directly to amplifier).
- **Unwanted Noise or Hum:**
  - Ensure you are using a regulated, isolated power supply. Daisy-chaining power with other pedals can sometimes introduce noise.
  - Check for ground loops in your setup.
  - Try moving the pedal away from other electronic devices that might cause interference.
- **Poor Tracking or Glitching:**
  - Ensure your instrument's output is strong and clear. Weak signals can affect tracking.
  - Consider placing a compressor pedal before the MEL9 to provide a more consistent input signal, especially for guitar.
  - Playing technique can influence tracking. Try to play cleanly and avoid excessive string noise.

If problems persist after these steps, please refer to the support information below.

Specifications

Feature	Specification
Item Weight	1.47 pounds (0.67 Kilograms)
Product Dimensions	7.25 x 6.2 x 3.25 inches (4.75"L x 4"W x 2.25"H)
Item Model Number	MEL9
Batteries	1 9V battery required (for internal use, typically powered by adapter)
Connector Type	1/4 inch audio jack
Hardware Interface	1/4-inch Audio
Signal Format	Analog
Power Source	Corded Electric (9V DC center-negative)

Warranty and Support

Electro-Harmonix products are designed for durability and performance. For specific warranty information, please refer to the documentation included with your purchase or visit the official Electro-Harmonix website. In most regions, Electro-Harmonix offers a one-year warranty covering defects in materials and workmanship. For further assistance, technical support, or to view the official user manual PDF, please visit the Electro-Harmonix support page or refer to the following link:

Download Official MEL9 User Manual (PDF)

When contacting support, please have your product model (MEL9) and serial number available.

© 2025 Electro-Harmonix. All rights reserved.

Related Documents - MEL9

	Electro-Harmonix Attack Decay Tape Reverse Simulator User Manual Comprehensive user manual for the Electro-Harmonix Attack Decay Tape Reverse Simulator guitar pedal. Learn about its features, controls, modes, connections, and operation.
	Electro-Harmonix Nano Big Muff Pi User Manual and Product Information Detailed information on the Electro-Harmonix Nano Big Muff Pi guitar effects pedal, including operating instructions, controls, power requirements, battery replacement, and warranty details. Learn how to get the best sound from this compact distortion-sustain device.
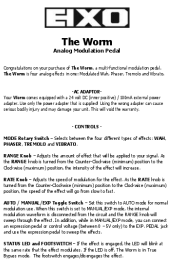	Electro-Harmonix The Worm Analog Modulation Pedal User Manual User manual for the Electro-Harmonix The Worm Analog Modulation Pedal, detailing its features, controls, connections, warranty information, and FCC compliance.
	Electro-Harmonix MICRO POG Polyphoner Oktaven Generator - Handbuch und Spezifikationen Detaillierte Informationen und Bedienungsanleitung für den Electro-Harmonix MICRO POG Polyphoner Oktaven Generator, einschließlich Bedienelemente, Anschlüsse, Klangeinstellungen und Garantieinformationen.

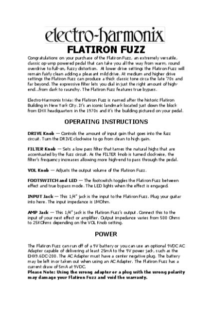
electro-harmonix
FLATIRON FUZZ

Electro-Harmonix Flatiron Fuzz Guitar Pedal - Manual and Features

Explore the Electro-Harmonix Flatiron Fuzz, a versatile op-amp powered guitar pedal offering warm overdrive to fuzzy distortion. Learn about its controls, power, and warranty.

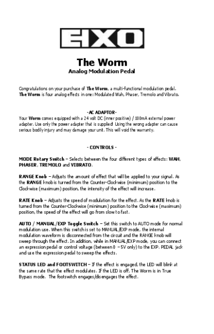
EHX
The Worm
Analog Modulation Pedal

Electro-Harmonix The Worm Analog Modulation Pedal User Manual

User manual for the Electro-Harmonix The Worm analog modulation pedal, detailing its features, controls, connections, warranty information, and FCC compliance.

Documents - Electro-Harmonix – MEL9

electro-harmonix

MEL9

Tape Replay Machine

Congratulations on purchasing the Electro-Harmonix MEL9 Tape Replay Machine. Now any electric guitar player can have access to nine magically quirky, dark and unique Mellotron® sounds. No more extra devices such as special and cumbersome 13-pin MIDI pickups! In addition to electric guitar, you can trigger the MEL9 with any instrument that produces an electrical output, such as a keyboard or a bass, down to 55 Hz or A1.

The polyphonic MEL9 has superior tracking; you can create single notes or chords with ease. The MEL9 will follow guitar bends, dive bombs, slurs, and any other guitar expression/performance techniques you can throw at it!

WARNING: Your MEL9 comes equipped with an Electro-Harmonix 9.6DC-200BI power supply (same as used by Boss® & Ibanez®: 9.6 Volts DC 200mA). The MEL9 requires 100mA at 9VDC with a center negative plug. Using the wrong adapter or a plug with the wrong polarity may damage your MEL9 and void the warranty.

GETTING STARTED

Connect the supplied power adapter to the 9V power jack. Plug your instrument into the INPUT jack; connect your amp to the EFFECT OUTPUT jack. Set the DRY knob to minimum (fully counterclockwise) and set the other top row knobs to 12 o'clock. Select a preset ("ORCHESTRA" is a good starting point) and step on the footswitch to turn on the LED. Play your instrument and adjust controls to your liking.

Mellotron is a registered trademark of David Kean, M. Resch AB and Markus Resch.

[pdf] User Manual Quick Start Guide Warranty

mel9 manual Electro Harmonix 31 янв 2021 г — ehx 01

MEL9 Tape Replay Machine Congratulations on purchasing the Electro-Harmonix **MEL9** Tape Replay Machine. Now any electric guitar player can have access to nine magically quirky, dark and unique Mellotron sounds. No more extra devices such as special and cumbersome 13-pin MIDI pickups In addition to el...

lang:en score:56 filesize: 144.04 K page_count: 6 document date: 2021-01-25

electro-harmonix

MEL9

Tape Replay Machine

Felicidades por su compra del Electro Harmonix MEL 9, Máquina De Repetición de Cinta.

Ahora, Cualquier guitarrista eléctrico puede tener acceso a nueve sonidos mágicos, extravagantes obscuros y únicos del Mellotron®. ¡No más aparatos extras como las pastillas MIDI de 13 pins; especiales e incómodas! Adicionalmente a la guitarra eléctrica, usted puede disparar (trigger) el MEL9 con cualquier instrumento que produzca una señal eléctrica, tal como un teclado o un bajo, bajando hasta los 55 Hz o La (A) índice 1.

La captación de polifónico MEL 9 es superior; usted puede crear notas individuales o acordes con facilidad. ¡El MEL9 seguirá los bends (portamentos ascendentes), dive bombs (portamentos descendentes), slurs (ligados) o cualquier técnica de expresión/desempeño de guitarra que usted le "aviente"!

ADVERTENCIA: Su MEL9 viene equipado con una fuente de poder Electro-Harmonix 9.6DC-200BI (la misma utilizada por Boss® & Ibanez®: 9.6 Volts DC 200mA). El MEL9 requiere 100mA a 9VDC con un plug de centro negativo. El utilizar el adaptador incorrecto o la polaridad incorrecta puede dañar su MEL9 e invalidar la garantía.

COMENZANDO

Conecte el adaptador de poder proporcionado a jack de poder de 9V. Conecte su instrumento en el jack de INPUT (Entrada); Conecte su amplificador al jack de EFFECT OUTPUT (Salida de Efecto). Ajuste la perilla de DRY (Señal Seca- sin efecto) al mínimo (totalmente en el sentido opuesto de las manecillas del reloj) y ajuste las otras perillas de la hilera superior a la posición de las 12:00. Seleccione un preset (preprogramado) ("ORCHESTRA" es un buen punto de inicio) y pise el footswitch (interruptor de piso) para encender el LED. Toque su instrumento y ajuste los controles al gusto.

Mellotron es una marca registrada de David Kean, M. Resch AB and Markus Resch.

[pdf] User Manual

The Worm john Descargar manual de uso Pedal Electro Harmonix Mel9 Tape Replay Machine Libertella Casa 74369 ELECTRO HARMONIX MEL9 TAPE REPLAY MACHINE qloud ar SITES IMG casa libertella 03 2020 |||

MEL9 Tape Replay Machine Felicidades por su compra del Electro Harmonix MEL 9, Mquina De Repeticin de Cinta. Ahora, Cualquier guitarrista elctrico puede tener acceso a nueve sonidos mgicos, extravagantes obscuros y nicos del Mellotron. No ms aparatos extras como las pastillas MIDI de 13 pins; especi...

lang:es score:51 filesize: 251.24 K page_count: 6 document date: 2016-03-23

electro-harmonix

MEL9

Tape Replay Machine

Congratulations on purchasing the Electro-Harmonix MEL9 Tape Replay Machine. Now any electric guitar player can have access to nine magically quirky, dark and unique Mellotron® sounds. No more extra devices such as special and cumbersome 13-pin MIDI pickups! In addition to electric guitar, you can trigger the MEL9 with any instrument that produces an electrical output, such as a keyboard or a bass, down to 55 Hz or A1.

The polyphonic MEL9 has superior tracking: you can create single notes or chords with ease. The MEL9 will follow guitar bends, dive bombs, slurs, and any other guitar expression/performance techniques you can throw at it!

WARNING: Your MEL9 comes equipped with an Electro-Harmonix 9.6DC200BE power supply (same as used by Boss® & Ibanez®: 9.6 Volts DC 200mA). The MEL9 requires 180mA at 9VDC with a center negative plug. Using the wrong adapter or a plug with the wrong polarity may damage your MEL9 and void the warranty.

GETTING STARTED
Connect the supplied power adapter to the 9V power jack. Plug your instrument into the INPUT jack; connect your amp to the EFFECT OUTPUT jack. Set the DRY knob to minimum (fully counterclockwise) and set the other top row knobs to 12 o'clock. Select a preset ("ORCHESTRA" is a good starting point) and step on the footswitch to turn on the LED. Play your instrument and adjust controls to your liking.

Mellotron is a registered trademark of David Kean, M. Resch AB and Markus Resch.

[pdf] User Manual Owner's Manual Quick Start Guide Instructions Warranty

The Worm john MEL9 es juno co uk de PRESET DESCRIPTIONS 1 ORCHESTRA This sound represents a full orchestra—including an octave below the normal guitar—and produces gigantic 2 CELLO of solo cello includes s natural vibrato 3 STRINGS Presenting small four piece string section including manual 605739 01U Download Electro Harmonix Tape Replay Machine Pedal user Owner Manual archive ehx Manuel utilisateur en Manuale d Uso EHX at Juno Records CABLE KIT KraftMusic Zikinf Mel9 Pedale Effetto zZounds Owners mel9 electro harmonix manuel 50587 20200313091956 home httpd data media kraftmusic ownersmanual assets instructions zikinf manuels yourmusiconline it file 2020 11 cf3 zzounds 0af74759d2dcea63863d022676144d34 Kraft Music files americanmusical ItemFiles manuals rebates manualElectro ManualElectro ManualMEL9 ehxMEL9 ukMEL9 EHXElectro RecordsElectro MusicElectro KraftMusicPRESET vibratoPRESET vibratoElectro ZikinfElectro EffettoPRESET zZoundsElectro Manualelectro 50587Manuale 20200313091956home mel9home mel9EHX manualhome mel9Electro ManualEHX manualEHX manualjuno 01Ufiles Manualkraftmusic Manualarchive mel9es 01Ude 01Uzikinf 50587yourmusiconline 20200313091956ehx mel9cf3 0af74759d2dcea63863d022676144d34cf3 0af74759d2dcea63863d022676144d34americanmusical manualcf3 0af74759d2dcea63863d022676144d34files Manualamericanmusical manualamericanmusical RecordsMEL9 User B01D3MCYTQElectro zZounds71cnfaPaxjLElectro 01Um amazon images I 71cnfaPaxjLfiles |||

MEL9 Tape Replay Machine Congratulations on purchasing the Electro-Harmonix **MEL9** Tape Replay Machine. Now any electric guitar player can have access to nine magically quirky, dark and unique Mellotron sounds. No more extra devices such as special and cumbersome 13-pin MIDI pickups In addition to el...

lang:en score:48 filesize: 209.76 K page_count: 6 document date: 2016-03-16

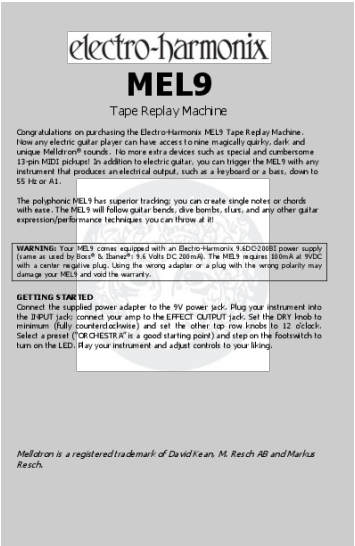

electro-harmonix

MEL9

Tape Replay Machine

Congratulations on purchasing the Electro-Harmonix MEL9 Tape Replay Machine. Now any electric guitar player can have access to nine magically quirky, dark and unique Mellotron® sounds. No more extra devices such as special and cumbersome 13-pin MIDI pickups! In addition to electric guitar, you can trigger the MEL9 with any instrument that produces an electrical output, such as a keyboard or a bass, down to 55 Hz or A1.

The polyphonic MEL9 has superior tracking: you can create single notes or chords with ease. The MEL9 will follow guitar bends, dive bombs, slurs, and any other guitar expression/performance techniques you can throw at it!

WARNING: Your MEL9 comes equipped with an Electro-Harmonix 9.6DC200BE power supply (same as used by Boss® & Ibanez®: 9.6 Volts DC 200mA). The MEL9 requires 180mA at 9VDC with a center negative plug. Using the wrong adapter or a plug with the wrong polarity may damage your MEL9 and void the warranty.

GETTING STARTED
Connect the supplied power adapter to the 9V power jack. Plug your instrument into the INPUT jack; connect your amp to the EFFECT OUTPUT jack. Set the DRY knob to minimum (fully counterclockwise) and set the other top row knobs to 12 o'clock. Select a preset ("ORCHESTRA" is a good starting point) and step on the footswitch to turn on the LED. Play your instrument and adjust controls to your liking.

Mellotron is a registered trademark of David Kean, M. Resch AB and Markus Resch.

[pdf] User Manual Quick Start Guide Warranty

Download ManualElectro Harmonix Mel9 Synth Palaceout098 mel9 mcdn shopify s files 1 0580 0031 0428 out098 m v 1630702300 Electro Tape Replay Machine User ManualDownload What To Know Where Buy EquipboardElectro Palaceelectro harmonix tape replay machine manualout098 mimages equipboard item manual 36042 electro manualcdn PalaceElectro MEL9 United Stateselectro m383615 enimages 1630702300fast images static thomann de pics atg atgdata document 383615 en ||| ||| MEL9 Tape Replay Machine Congratulations on purchasing the Electro-Harmonix MEL9 Tape Replay Machine. Now any electric guitar player can have access to nine magically quirky, dark and unique Mellotron sounds. No more extra devices such as s ||| MEL9 Tape Replay Machine Congratulations on purchasing the Electro-Harmonix MEL9 Tape Replay Machine. Now any electric guitar player can have access to nine magically quirky, dark and unique Mellotron sounds. No more extra devices such as s

MEL9 Tape Replay Machine Congratulations on purchasing the Electro-Harmonix **MEL9** Tape Replay Machine. Now any electric guitar player can have access to nine magically quirky, dark and unique Mellotron sounds. No more extra devices such as special and cumbersome 13-pin MIDI pickups In addition to el...

lang:en score:43 filesize: 144.04 K page_count: 6 document date: 2021-01-25

KEYBOARDS FÜR GITARRISTEN

Electro-Harmonix C9, Mel9, Key9

Zuerst schickte Electro-Harmonix den Orgeltreter B9 ins Rennen. Technisch größtenteils identisch, wurden die Effektpedale C9, Mel9 und Key9 mit weiteren Sounds bekannter Tasteninstrumente gefüttert. Muss der Keyboarder nun um seinen Platz in der Band fürchten?

TEXT Thomas Jachmann | FOTOS Dieter Stork

[pdf] User Manual

Electro Harmonix Mel9 Frank C9 Key9 Musikhaus Thomann mm58323 gb201612150 thomann de prod review 51250 |||

KEYBOARDS FR GITARRISTEN Electro-Harmonix C9, **Mel9**, Key9 Zuerst schickte Electro-Harmonix den Orgeltreter B9 ins Rennen. Technisch grtenteils identisch, wurden die Effektpedale C9, **Mel9** und Key9 mit weiteren Sounds bekannter Tasteninstrumente gefttert. Muss der Keyboarder nun um seinen Platz in d...

lang:de score:42 filesize: 228.3 K page_count: 2 document date: 2016-11-08

electro-harmonix

MEL9

Tape Replay Emulator

Herzlichen Glückwunsch zum Erwerb des Electro-Harmonix MEL9 Tape reply Emulators. Nun hat jeder Gitarrist Zugang zu neun magisch-verschnörkelten, dunkeln und unverkennbaren Mellotron® Sounds. Zusätzliche und umständliche Teile wie 13-polige MIDI Pickups werden nicht mehr benötigt!

Außer von einer E-Gitarre kann der MEL9 mittels jeglichem elektronischem Instrument angesteuert werden, wie z.B. von Keyboard oder Bass Gitarre, bis hinunter zu 55Hz (A1).

Der polyphonische MEL9 trackt hervorragend: Einzelne Noten oder Akkorde lassen sich mit Leichtigkeit gestalten. Der MEL9 folgt Gitarren Bending, Dive-Bomb Effekten, gebundenen Noten, sowie den anspruchsvollsten Spieltechniken die man sich vorstellen kann!

WARNUNG: Der MEL9 wird mit dem Electro-Harmonix 9ADC-200 Netzteil ausgeliefert (wie auch von Boss® & Ibanez® verwendet: 9,6 Volt DC 200mA). Der MEL9 benötigt 100mA bei 9V Gleichspannung, mit negativer Polung am Innenkontakt. Niemals andere Netzteile verwenden, auch keine von Electro-Harmonix. Andernfalls drohen Personen- und Sachschäden sowie Erlöschen der Garantie. Der MEL9 kann nicht mit Batterien betrieben werden.

LOS GEHT'S

Das mitgelieferte Netzteil an die 9V Stromeingangsbuchse anschließen und das Instrument an die INPUT Buchse anschließen. Den Verstärker mit der EFFECT OUT OUTPUT Buchse verbinden. Den DRY Regler auf Minimum stellen (Anschlag im Gegenuhrzeigersinn), und alle anderen Regler der oberen Reihe auf eine ungefähr mittlere Stellung. Einen Preset wählen („ORCHESTRA" ist ein passender Ansatzpunkt), und den Fußschalter drücken so dass die LED aufleuchtet. Beim Spielen des Instrumentes die Regler wie gewünscht einstellen.

Der Name Mellotron® ist markenrechtlich geschützt für David Kean, M. Resch AB und Markus Resch.

BEDIENUNGSTEILE

DRY VOL Regler
Bestimmt die Lautstärke des unbehandelten Instrumentensignals an der EFFECT OUT Buchse.

EFFECT VOL Regler
Bestimmt die Gesamtlautstärke des gewählten MEL9 Presets.

ATTACK REGLER
Der ATTACK Regler bestimmt die Geschwindigkeit der Pegelzunahme, oder wie schnell der Effekt wahrnehmbar wird. Den Attack Regler ganz herunterdrehen (bis zum Anschlag im Gegenuhrzeigersinn) um einen schnellen Anschlag mit minimaler Pegelzunahme zu erreichen. Den Regler aufdrehen um eine größere Pegelzunahme zu erzielen, und gespielte Noten allmählich einblenden zu lassen.
MERKE: Bei Einsatz des BRASS (Blechbläser) Presets stellt der ATTACK Regler die Geschwindigkeit einer Filterhüllkurve ein. Auf diese Weise lässt sich abgleichen wie schnell der BRASS Sound heller wird.

SUSTAIN REGLER

[pdf]

The Worm John H Pisani Bedienungsanleitung Electro Harmonix MEL9 Tape Replay Machine Soundland 289864 DE soundland de media 10 d2 34 |||

MEL9 Tape Replay Emulator Herzlichen Glckwunsch zum Erwerb des Electro-Harmonix **MEL9** Tape reply Emulators. Nun hat jeder Gitarrist Zugang zu neun magisch-verschnrkelten, dunkeln und unverkennbaren Mellotron Sounds. Zustzliche und umstndliche Teile wie 13-polige MIDI Pickups werden nicht mehr bentigt...

lang:de score:42 filesize: 94.83 K page_count: 4 document date: 2019-12-20

ELECTRO-HARMONIX MEL9

EEN MELLOTRON ONDER JE VOETEN

Je gitaar laten klinken als een kerkkoor, saxofoon, klarinet of cello? Het enige wat je daarvoor nodig hebt, is de Electro-Harmonix Mel9 Tape Relay Machine. Dit pedaal geeft je de klassieke sounds van de Mellotron.

[pdf]

Electro Harmonix MEL9 Tape Replay Machine Thomann Nederland 58151 musicmaker nl 18145 thomann de prod review ref prp dyk tes 0 |||

THOMAS VAN DEN BERG 26 is multi-instru- mentalist. Als drummer heeft hij vele podia versleten en o ... 9r9mfV1,ypfe-2-readecxdrtsapey9tpe,-dtcveasmorcalh,luaimkneeplueatfa,freocutt,put ELECTRO-HARMONIX **MEL9** EEN MELLOTRON ONDER JE VOETEN Je gitaar laten klinken als een kerkkoor, saxofoon, klarinet of ...

lang:nl score:41 filesize: 699.28 K page_count: 1 document date: 2016-05-18

ELECTRO-HARMONIX MEL9 £179

This Mellotron in a stompbox invites you to frolick into *Strawberry Fields* and beyond...

[pdf]

GIT409 peds ehx indd Electro Harmonix MEL9 Tape Replay Machine Thomann France git409peds thomann de prod review 47839 |||

Electro-Harmonix Electro-Harmonix **MEL9**179 This Mellotron in a stompbox invites you to frolick into Strawberry Fields and beyond... Words Trevor Curwen Photography Neil Godwin E lectro-Harmonix has created a bit of a mini industry with stompboxes that give your guitar the sound of a vintage keyboar...

lang:en score:41 filesize: 2.71 M page_count: 2 document date: 2016-06-08

test | Electro-Harmonix Mel9 gitaarpedaal

Klanktapijt onder je voet

Je gitaar laten klinken als strijkers, fluit, saxofoon, klarinet, cello, brass of koor? Het enige wat je daarvoor nodig hebt is de Electro-Harmonix Mel9 Tape Replay Machine. Dit pedaal levert de klassieke sounds van de Mellotron.

[pdf]

Electro Harmonix MEL9 Tape Replay Machine Thomann Nederland 58013 interface nl 18948 thomann de prod review ref prp dyk tes 1 |||

test Electro-Harmonix **Mel9** gitaarpedaal Klanktapijt onder je voet in popmuziek is de fluitklank in Strawberry Fields Forever van The Beatles. Techniek De **Mel9** triggert geen samples, maar behandelt je gitaarsignaal met een combinatie van filters, zodat het haast als een sample klinkt. Ingewikkeld...

lang:nl score:41 filesize: 83.79 K page_count: 1 document date: 2017-05-15

GEAR REVIEW EHX MEL9

In its quest seemingly to make keyboard players redundant, EHX has produced the Mel9

ELECTRO-HARMONIX MEL9 £170

A keyboard classic that you can play from your guitar...

[pdf]

TGR284 gear quick1 indd Electro Harmonix MEL9 Tape Replay Machine Thomann France tgr284gear thomann de prod review 48537 ref prp dyk tes 1 |||

REVIEW EHX **MEL9** In its quest seemingly to make keyboard players redundant, EHX has produced the **Mel9** The **Mel9** features nine classic Mellotron sounds to choose from ELECTRO-HARMONIX **MEL9** 170 A keyboard classic that you can play from your guitar... WHEN The Beatles used a Mellotron on Strawberry Fi...

lang:en score:40 filesize: 1.95 M page_count: 1 document date: 2016-08-11

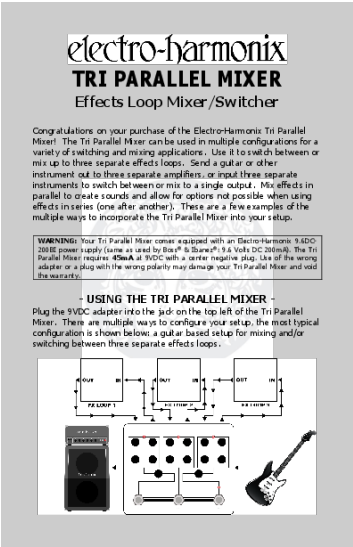

electro-harmonix

TRI PARALLEL MIXER

Effects Loop Mixer/Switcher

Congratulations on your purchase of the Electro-Harmonix Tri Parallel Mixer! The Tri Parallel Mixer can be used in multiple configurations for a variety of switching and mixing applications. Use it to switch between or mix up to three separate effects loops. Send a guitar or other instrument out to three separate amplifiers, or input three separate instruments to switch between or mix to a single output. Mix effects in parallel to create sounds and allow for options not possible when using effects in series (one after another). These are a few examples of the multiple ways to incorporate the Tri Parallel Mixer into your setup.

WARNING: Your Tri Parallel Mixer comes equipped with an Electro-Harmonix 9.6DC-200BE power supply (same as used by Boss® & Ibanez®: 9.6 Volts DC 200mA). The Tri Parallel Mixer requires **45mA** at 9VDC with a center negative plug. Use of the wrong adapter or a plug with the wrong polarity may damage your Tri Parallel Mixer and void the warranty.

- USING THE TRI PARALLEL MIXER -

Plug the 9VDC adapter into the jack on the top left of the Tri Parallel Mixer. There are multiple ways to configure your setup, the most typical configuration is shown below: a guitar based setup for mixing and/or switching between three separate effects loops.

[pdf] User Manual Instructions Warranty

The Worm john TRI PARALLEL MIXER synthmanuals midimanuals OUTPUT This jack on the left of unit is master output for Tri Parallel Mixer MASTER VOL knob sets level mixer DRY how much dry signal present at INPUT sent to STATUS LED lights when active and doesn t this manual GLOBAL CONTROLS JACKS right input here will be outputted an channel s SEND In bypass connects directly tri parallel EHX TRIPARALLEL manuals electro harmonix instructions jp juno co uk 738558 01U ehx 2020 11 media americanmusical ItemFiles Manual Electro Harmonix Instructions Download Effects Loop Switcher Pedal user archive assets Juno Records Splitting Signal And Then Merging Them Back Again Page 3 Gear electroharmonix triparallelmixer en play strumentimusicali net manuali 2019 07 31 67 manualarchive mixerTRI midimanualsTRI midimanualsThe Strumenti MusicaliElectro RecordsSplitting PageOUTPUT tOUTPUT atTRI Congratulations your purchase Mixer! can be this jackElectro InstructionsElectro Instructionstri mixertri mixerEHX manualtri mixerjuno 01Uarchive mixersynthmanuals mixermidimanuals mixerstrumentimusicali enjp 01Uehx mixerplay enmedia manualehx mixerehx mixerarchive |||

TRI PARALLEL MIXER Effects Loop Mixer/Switcher Congratulations on your purchase of the Electro-Harmo ... w: In the example above, you can use three separate effects from the EHX 9 Series, in this case a **Mel9** Tape Replay Machine, B9 Organ Machine, and Synth9 Synthesizer Machine, and combine them in para...

lang:en score:38 filesize: 832.67 K page_count: 12 document date: 2019-07-01

electro-harmonix

MEL9

Tape Replay Emulator

Herzlichen Glückwunsch zum Erwerb des Electro-Harmonix MEL9 Tape reply Emulators. Nun hat jeder Gitarrist Zugang zu neun magisch-verschnörkelten, dunkeln und unverkennbaren Mellotron® Sounds. Zusätzliche und umständliche Teile wie 13-polige MIDI Pickups werden nicht mehr benötigt.
Außer von einer E-Gitarre kann der MEL9 mittels jeglichem elektronischem Instrument angesteuert werden, wie z.B. von Keyboard oder Bass Gitarre, bis hinunter zu 55Hz (A1).

Der polyphonische MEL9 trackt hervorragend: Einzelne Noten oder Akkorde lassen sich mit Leichtigkeit gestalten. Der MEL9 folgt Gitarren Bending, Dive-Bomb Effekten, gebundenen Noten, sowie den anspruchsvollsten Spieltechniken die man sich vorstellen kann!

WARNUNG: Der MEL9 wird mit dem Electro-Harmonix 9.6DC-200 Netzteil ausgeliefert (wie auch von Boss® & Ibanez® verwendet: 9.6 Volt DC 200mA). Der MEL9 benötigt 100mA bei 9V Gleichspannung, mit negativer Polung am Innenkontakt. Niemals andere Netzteile verwenden, auch keine von Electro-Harmonix. Andernfalls drohen Personen- und Sachschäden sowie Erlöschen der Garantie. Der MEL9 kann nicht mit Batterien betrieben werden.

LOS GEHT'S
Das mitgelieferte Netzteil an die 9V Stromeingangsbuchse anschließen, und das Instrument an die INPUT Buchse anschließen. Den Verstärker mit der EFFECT OUT OUTPUT Buchse verbinden. Den DRY Regler auf Minimum stellen (Anschlag im Gegenuhrzeigersinn), und alle anderen Regler der oberen Reihe auf eine ungefähr mittlere Stellung. Einen Preset wählen („ORCHESTRA" ist ein passender Ansatzpunkt), und den Fußschalter drücken so dass die LED aufleuchtet. Beim Spielen des Instrumentes die Regler wie gewünscht einstellen.

Der Name Mellotron® ist markenrechtlich geschützt für David Kean, M. Resch AB und Markus Resch.

BEDIENUNGSTEILE

DRY VOL Regler
Bestimmt die Lautstärke des unbehandelten Instrumentensignals an der EFFECT OUT Buchse.

EFFECT VOL Regler
Bestimmt die Gesamtlautstärke des gewählten MEL9 Presets.

ATTACK REGLER
Der ATTACK Regler bestimmt die Geschwindigkeit der Pegelzunahme, oder wie schnell der Effekt wahrnehmbar wird. Den Attack Regler ganz herunterdrehen (bis zum Anschlag im Gegenuhrzeigersinn) um einen schnellen Anschlag mit minimaler Pegelzunahme zu erreichen. Den Regler aufdrehen um eine größere Pegelzunahme zu erzielen, und gespielte Noten allmählich einblenden zu lassen.
MERKE: Bei Einsatz des BRASS (Blechbläser) Presets stellt der ATTACK Regler die Geschwindigkeit einer Filterhüllkurve ein. Auf diese Weise lässt sich abgleichen wie schnell der BRASS Sound heller wird.

SUSTAIN REGLER

[pdf]

The Worm John H Pisani MEL9Der MEL9 simuliert Mellotron® Sounds das heißt dass die 9 Instrumente des eben nur so „echt klingen wie selbst Zum Beispiel 289864 DEsoundland de media 10 d2 34 289864 DE srsltid AfmBOoqsJGZ6ghZwTUFmOC1 qOAUI0D62NMpx brfyrmTjRmqsyabvEb Der Beispiel WARNUNG wird mit dem Electro Harmonix 96DC 200 Netzteil ausgeliefert auch von Boss® Ibanez® verwendet 6 Volt DC 200mA benötigt289864 DE289864 brfyrmTjRmqsyabvEbsoundland AfmBOoqXlqjbu0jxLiJpGsK01PoCaNUPd9mlxYnJCtmP0h9 Qvy9 w1l |||

MEL9 Tape Replay Emulator Herzlichen Glckwunsch zum Erwerb des Electro-Harmonix **MEL9** Tape reply Emulators. Nun hat jeder Gitarrist Zugang zu neun magisch-verschnrkelten, dunkeln und unverkennbaren Mellotron Sounds. Zustzliche und umstndliche Teile wie 13-polige MIDI Pickups werden nicht mehr bentigt...

lang:de score:34 filesize: 94.83 K page_count: 4 document date: 2019-12-20

StrumentiMusicali.net

giovedì 12 gennaio, 2023

Effetti per Chitarra > Altri Effetti a Pedale

ELECTRO HARMONIX BASS9 Usato

electro harmonix

Cod.Art. : 172127

EFFETTO SIMULATORE DI BASSO PER CHITARRA

La Bass Machine BASS9 polifonica trasforma una chitarra in nove bassi diversi e non richiede pickup speciali, modifiche MIDI o dello strumento. Si basa sulla stessa tecnologia che aziona tutti i pedali della serie EHX 9, come la pluripremiata Tape Replay Machine
MEL9, ma presenta anche un nuovo algoritmo ottimizzato per trasporre di una e due ottave giù la tonalità con dinamica ed un tracciamento superiori. Il pedale è dotato di controlli del volume Effect e Dry indipendenti in modo che i chitarristi possano regolare con precisione il loro mix al jack di output Effect, oltre ad un jack di uscita Dry sempre attivo che emette il segnale di ingresso con gain unitario. I controlli 1 e 2 sono stati progettati per regolare parametri specifici per ciascuno dei nove programmi. Ad esempio in Precision, CTRL 1 controlla le ottave secondarie mentre CTRL 2 imita il controllo originale del tono dello strumento. Il Bass9 è dotato di un alimentatore EHX 9.6DC200mA standard.

Caratteristiche

- Precision: Rende omaggio all'iconico Fender P Bass
- LongHorn: Emula il basso a 6 corde Danelectro, ideale per i suoni di tipo baritono
- Fretless: Offre sia bassi elettrici che contrabbassi
- Synth: Omaggia il classico Taurus Synthesizer
- Virtual: Consente di regolare la densità del body e la lunghezza del manico del basso per molteplici suoni di basso
- Bowed: Contrabbasso classico

StrumentiMusicali.net - https://www.strumentimusicali.net - info@strumentimusicali.net

Pagina 1/2

Electro-Harmonix Bass9 Used Polyphonic Bass Machine Pedal

Detailed overview of the Electro-Harmonix Bass9 Used polyphonic bass machine pedal. This device transforms your guitar into nine distinct bass sounds, featuring advanced octave transposition, independent effect/dry controls, and detailed descriptions of each of its nine programs like Precision, LongHorn, and Synth. Includes article code and pricing.

lang:it score:31 filesize: 25.91 K page_count: 2 document date: 2023-01-12

Firma: Player Plus doo
Adresa: Svetogorska 9
Telefon: +381 11 3347 442
Fax: +381 11 3347 615
PIB: 106966344
E-mail: porudzbine@player.rs

Electro Harmonix MEL9 Tape Replay Machine

Sifra: 18034
Kategorija prozivoda: Pedale
Proizvodac: Electro Harmonix

Cena: 27.480,00 rsd

Electro Harmonix MEL9 Tape Replay Machine
Circuit: Digital
Bypass: Buffered Bypass
Audio: Mono
Power Supply: 9.6VDC-200mA power adapter included
Dimensions (in): 4.75 x 4 x 2.25
Current Draw: 100mA
Year Released: 2016

Now any electric guitar player can have access to nine magically quirky, dark and unique Mellotron® sounds. No more extra devices such as special and cumbersome 13-pin MIDI pickups! In addition to electric guitar, you can trigger the MEL9 with any instrument that produces an electrical output, such as a keyboard or a bass, down to 55 Hz or A1.

The polyphonic EHX MEL9 has superior tracking; you can create single notes or chords with ease. The MEL9 will follow guitar bends, dive bombs, slurs, and any other guitar expression/performance techniques you can throw at it!

Pays homage to nine of the coolest Mellotron® sounds: Orchestra, Cello, Strings, Flute, Clarinet, Saxophone, Brass, Low Choir and High Choir
Works on guitar without modifications, special pickups or MIDI implementation and tracks bends, slides, even whammy dive bombs!
Also works with bass guitar down to the open A string as well as keyboards within the limits of its polyphony (5 notes) and range (A1 to A5)
Includes independent Effect and Dry volume controls so you can create the perfect mix at the Effects output
Dry Output jack outputs your input signal at unity gain
Attack control sets the volume swell speed. As it's turned clockwise the notes fade in more gradually
Sustain control adjusts the release time after a sound is stopped. As it's turned clockwise, the fade out time increases
Power adapter included

Cene su informativnog karaktera. Prodavac ne odgovara za tačnost cena iskazanih na sajtu, zadržava pravo izmene cena. Poruči za ostale artikle, informacije o stanju lagera i akcionim cenama možete dobiti na upit. Plaćanje na isključivo virmanski - bezgotovinski.

[pdf] Dimension Guide

Cena 27 480 00 rsd Player rs The polyphonic EHX MEL9 has superior tracking you can create single notes or chords with ease will follow guitar bends dive bombs slurs and any document player stampanje 28109 |||

Ilmogagoe not found or type unknown Firma: Player Plus doo Adresa: Svetogorska 9 Telefon: 381 11 3347 442 Fax: 381 11 3347 615 PIB: 106966344 E-mail: porudzbine player.rs Electro Harmonix **MEL9** Tape Replay Machine Sifra: 18034 Kategorija prozivoda: Pedale Proizvoac: Electro Harmonix Cena: 27.480,...

lang:en score:30 filesize: 25.84 K page_count: 1 document date: 2025-06-07

PEDALBOARD

MANUFACTURER ELECTRO-HARMONIX
MODEL SYNTHSYNTHESIZER MACHINE
PRICE £200
ELECTRO-HARMONIX WWW.EHX.COM

ELECTRO-HARMONIX

Synth9 Synthesizer Machine

The New York effects giant's latest addition to the 9 Series brings synthesizer sounds to your guitar strings

Words: Trevor Curwen Photography: Neil Godwin

[pdf]

GIT422 peds ehx indd Electro Harmonix Synth9 Synthesizer Machine Thomann United Arab Emirates git422peds thomann de prod review 53709 |||

P EDALBOARD m a n u fac t u r e r Electro-Harmonix model Synth9 Synthesizer Machine price 200 Elec ... organs with its B9 and C9 pedals, electric pianos with the KEY9, and the vintage Mellotron with the **MEL9**. The Synth9 follows the blueprint of those four pedals and offers up the sound of nine differen...

lang:en score:30 filesize: 2.51 M page_count: 2 document date: 2017-06-14

ELECTRO-HARMONIX BLURST, CANYON EN SYNTH9

INNOVATIEVE EFFECTEN

[pdf]

Electro Harmonix Synth9 Synthesizer Machine Thomann Nederland 58198 musicmaker nl 19518 thomann de prod review ref prp dyk tes 0 |||

tekst: Jan Peter Eerenberg Blurst en Canyon , Gerard van Dongeren Synth9 Electro-Harmonix Blurst ... voor gitaar. Na twee orgelemulaties B9 en C9 , eentje voor elektrische piano s Key9 , Mellotron **Mel9** , nu de Synth9 die je klassieke synthsounds geeft. Twee control-draaiknoppen laten je per soun...

lang:nl score:30 filesize: 1.06 M page_count: 1 document date: 2017-09-21

Baanbrekend synth-effect

[pdf]

Electro Harmonix Synth9 Synthesizer Machine Thomann Nederland 59449 interface nl 20194 thomann de prod review ref prp dyk tes 2 |||

test Electro-Harmonix Synth9 fx-pedaal Baanbrekend synth-e ect Veel dingen die vroeger onmogelijk ... ede zin van dat woord . Het werkt met dezelfde techniek als de al eerder uitgekomen KEY9, B9, C9 en **MEL9** van EHX. Bij de **MEL9**, de mellotron-emulatie zie Interface 209 , was ik zo overdonderd door de ...

lang:nl score:29 filesize: 121.65 K page_count: 1 document date: 2017-06-20

PEDALBOARD

ROUND UP

Electro-Harmonix pedals

Three new units from Long Island in familiar formats

Words Trevor Curwen Photography Phil Barker

Mod 11 Modulator £136

Nano Operation Overlord Overdrive £84

Bass9 Bass Machine £195

[pdf] Catalog

GIT455 peds ehx indd Electro Harmonix Mod 11 Modulator Musikhaus Thomann git455peds thomann de prod review 71702 ref prp dyk tes 1 |||

PEDALBOARD M A N U FAC T U R E R ELECTRO-HARMONIX PRICE 84 TO 195 MODEL CONTACT MOD11,NANOOPERA ... some point. The Bass9 is the latest 9-series pedal following on from the B9, C9, Key9, Synth9 and **Mel9** pedals, which all endow your guitar with the sound of nine variations of a particular genre of ...

lang:en score:29 filesize: 3.47 M page_count: 2 document date: 2019-12-17

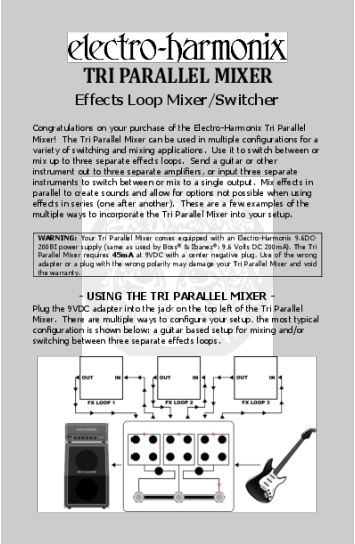

electro-harmonix

TRI PARALLEL MIXER

Effects Loop Mixer/Switcher

Congratulations on your purchase of the Electro-Harmonix Tri Parallel Mixer! The Tri Parallel Mixer can be used in multiple configurations for a variety of switching and mixing applications. Use it to switch between or mix up to three separate effects loops. Send a guitar or other instrument out to three separate amplifiers, or input three separate instruments to switch between or mix to a single output. Mix effects in parallel to create sounds and allow for options not possible when using effects in series (one after another). These are a few examples of the multiple ways to incorporate the Tri Parallel Mixer into your setup.

WARNING: Your Tri Parallel Mixer comes equipped with an Electro-Harmonix 9.6DC-200BS power supply (same as used by Boss® & Ibanez®: 9.6 Volts DC 200mA). The Tri Parallel Mixer requires 45mA at 9VDC with a center negative plug. Use of the wrong adapter or a plug with the wrong polarity may damage your Tri Parallel Mixer and void the warranty.

- USING THE TRI PARALLEL MIXER -

Plug the 9VDC adapter into the jack on the top left of the Tri Parallel Mixer. There are multiple ways to configure your setup. The most typical configuration is shown below: a guitar based setup for mixing and/or switching between three separate effects loops.

OUT IN FX LOOP 1 OUT IN FX LOOP 2 OUT IN FX LOOP 3

Electro-Harmonix Tri Parallel Mixer User Manual and Guide

Comprehensive guide to the Electro-Harmonix Tri Parallel Mixer, a versatile effects loop mixer and switcher for guitar and bass. Learn about its features, controls, parallel mixing, advanced switching modes, and configurations.

lang:en score:29 filesize: 855.84 K page_count: 11 document date: 2020-12-24

electro-harmonix

TRI PARALLEL MIXER

Effects Loop Mixer/Switcher

Herzlichen Glückwunsch zum Erwerb des Electro-Harmonix Tri Parallel Mixer! Der Tri Parallel Mixer lässt sich in unterschiedlichen Konfigurationen für eine Vielzahl von Schaltanforderungen und Mischanwendungen einsetzen: Zwischen drei verschiedenen Effektschleifen umschalten, oder diese mischen; eine Gitarre oder ein anderes Instrument an drei getrennte Verstärker anschließen; oder zwischen den Ausgängen drei verschiedener angeschlossener Instrumente wechseln, oder diese zu einem einzelnen Ausgang zu mischen; Effekte in Parallelschaltung kombinieren, um Sounds zu erzeugen und Optionen zu ermöglichen, die bei Reihenschaltung der Effekte (eins nach dem anderen) nicht möglich sind. Die hier aufgeführten Beispiele zeigen einige der vielfältigen Möglichkeiten, wie der Tri Parallel Mixer in eine jeglichen Ausrüstung integriert werden kann.

WARNUNG: Der TRI PARALLEL MIXER wird mit dem Electro-Harmonix 9.6DC-200 Netzteil ausgeliefert (kompatibel mit Boss® & Ibanez®: 9.6 Volt DC 200mA). Der TRI PARALLEL MIXER benötigt 45mA bei 9V Gleichspannung (DC), mit negativer Polung am Innenkontakt. Verwendung eines falschen Netzteils oder eines Steckers mit falscher Polarität kann zu Personen- und Sachschäden sowie Erlöschen der Garantie führen.

- ANWENDUNG DES TRI PARALLEL MIXER –

Das 9V Netzteil mit der Hohlbuchse am Kopfende des Tri Parallel Mixer verbinden. Es gibt mehrere Einrichtungsmöglichkeiten, die üblichste von diesen ist nachstehend abgebildet: eine Gitarrenkonfiguration mit Mischen und/oder Umschalten zwischen 3 verschiedenen Effekt-Loops ermöglicht.

AUSG. EING. FX LOOP 1 AUSG. EING. FX LOOP 2 AUSG. EING. FX LOOP 3

[pdf] User Manual

The Worm John H Pisani tri parallel mixer Soundland MASTER STATUS Diese LED leuchtet bei aktivem Gerät und erlischt im Master Bypass CH 1 2 3 LEDs leuchten auf um die jeweiligen aktiven Kanäle 298492 TPM Manual DE srsltid AfmBOopC8E49XXjNiEhMvYBKPH6TyuKiCnjzt EOnpV8jF bTc9ftyZn soundland de media 03 c0 84 |||

TRI PARALLEL MIXER Effects Loop Mixer/Switcher Herzlichen Glckwunsch zum Erwerb des Electro-Harmonix ... erlutert: 7 Im vorherigen Beispiel werden drei getrennte Effekte der EHX 9er-Serie verwendet der **Mel9** Tape Replay Emulator, die B9 Orgelmaschine und das Synth9 Synthesizer-Pedal , und parallel mite...

lang:de score:25 filesize: 755.2 K page_count: 12 document date: 2019-11-13

GEAR REVIEW

In its quest seemingly to make keyboard players redundant, EHX has produced the Mel9

ELECTRO-HARMONIX MEL9 £170

A keyboard classic that you can play from your guitar...

[pdf]

TGR284 gear quick1 indd prod review 48537 tgr284gear thomann de gb |||

REVIEW EHX **MEL9** In its quest seemingly to make keyboard players redundant, EHX has produced the **Mel9** The **Mel9** features nine classic Mellotron sounds to choose from ELECTRO-HARMONIX **MEL9** 170 A keyboard classic that you can play from your guitar... WHEN The Beatles used a Mellotron on Strawberry Fi...

lang:en score:24 filesize: 1.95 M page_count: 1 document date: 2016-08-11

Firma: Player Plus doo
Adresa: Svetogorska 9
Telefon: +381 11 3347 442
Fax: +381 11 3947 615
PIB: 109960344
E-mail: porudzbine@player.rs

Electro Harmonix STRING9

Šifra: 18056
Kategorija proizvoda: Pedale
Proizvođač: Electro Harmonix

Cena: 31.080,00 rsd

Circuit: Digital
Bypass: Buffered Bypass
Audio: Mono
Power Supply: 9 6VDC-200mA power adapter included
Dimensions (in): 4.75 x 4 x 2.25
Current Draw: 100mA
Year Released: 2022

The polyphonic STRING9 String Ensemble transforms a guitar into nine different string ensembles and string synthesizers while requiring zero modifications, special pickups, or MIDI implementation. It relies on the same technology powering all EHX 9 Series pedals. In a 9 Series first, the STRING9 includes the signature EHX Freeze effect on 3 of the presets to sample and hold notes and chords with infinite sustain.

A rotary switch on the STRING9 allows the player to select the sound of their choice, as follows:

SYMPHONIC: Re-creates the sound of a large symphony orchestra and features an octave down effect on the lower range of the guitar for a full sound
JUNE-O: Emulates the Juno® analog string synthesizer sound
PCM: Sound of a small string section sampled by a vintage PCM keyboard producing a warm vintage string sound
FLOPPY: Emulates the sound of an Orchestron® optical disc playback sampler, warble included
AARP: Emulates the classic ARP Solina® string synthesizer
CREWMAN: Emulates the Crumar Performer® analog string and brass synthesizer; Floyd in a box
ORCH FREEZE: Orchestral sound with EHX Freeze effect
SYNTH FREEZE: String synthesizer sound with EHX Freeze effect
VOX FREEZE: Mellotron® choir and strings sound from the EHX MEL9 with EHX Freeze effect

Download User Settings Sheet

The pedal is equipped with independent Effect and Dry volume controls so players can precisely tune their mix at the Effects output jack, plus a Dry output jack that always outputs the input signal at unity gain.

Controls 1 and 2 have been designed to adjust specific parameters for each of the nine programs adding usability and flexibility to each sound.

Simulates nine string ensemble and string synthesizer sounds
Tracks impeccably and works on guitar without mods, special pickups or MIDI implementation
Independent Effect and Dry volume knobs let you precisely control your mix at the Effects output
Controls 1 and 2 have been designed to adjust specific parameters for each of the nine programs
Dry output jack outputs the input signal at unity gain
Compact, rugged, easy to use

[pdf] Dimension Guide

Cena 31 080 00 rsd 1 dic 2023 — The polyphonic STRING9 String Ensemble transforms a guitar into nine different string ensembles and synthesizers while requiring zero modifications document player rs stampanje 28138 |||

Ilmogagoe not found or type unknown Firma: Player Plus doo Adresa: Svetogorska 9 Telefon: 381 11 3 ... synthesizer sound with EHX Freeze effect VOX FREEZE: Mellotron choir and strings sound from the EHX **MEL9** with EHX Freeze effect Download User Settings Sheet The pedal is equipped with independent Effe...

lang:en score:21 filesize: 867.98 K page_count: 2 document date: 2023-12-10

PEDALBOARD

MANUFACTURER: ELECTRO-HARMONIX
MODEL: MOD11,NANOOPERA,OVERDRIVE,BASS9,MACHINE
PRICE: £84 TO £195
CONTACT: ELECTRO-HARMONIX.WIX.DIS.COM

ROUND UP

Electro-Harmonix pedals

Three new units from Long Island in familiar formats

Mod 11 Modulator £136

Nano Operation Overlord Overdrive £84

Bass9 Bass Machine £195

[pdf] Catalog

GIT455 peds ehx indd prod review 71702 git455peds thomann de it |||

PEDALBOARD M A N U FAC T U R E R ELECTRO-HARMONIX PRICE 84 TO 195 MODEL CONTACT MOD11,NANOOPERA ... some point. The Bass9 is the latest 9-series pedal following on from the B9, C9, Key9, Synth9 and **Mel9** pedals, which all endow your guitar with the sound of nine variations of a particular genre of ...

lang:en score:21 filesize: 3.48 M page_count: 2 document date: 2019-12-17

[pdf] Catalog

MEL9 Tape Replay Machine effects amps 1 9 Series 3 Delays 7 Loopers Pitch Octave 11 Performance 13 Compressors 14 Overdrive Fuzz Distortion 21 Bass Effects 25 Synthesis 29 Filters 31 Modulation 32 Chorus 33 ehx dealer catalog 2017 2015 archive assets catalogs 2020 12

effects amps 1 9 Series 3 Delays 7 Loopers 9 Pitch Octave 11 Performance Series 13 Compressors 14 ... e classic sounds in a simple plug-in-and-play package. For demo videos and more visit www.ehx.com. **MEL9** Tape Replay Machine Pays homage to the classic Mellotron with nine of its most sought after sou...

lang:en score:21 filesize: 16.91 M page_count: 48 document date: 2017-07-13

[pdf] Catalog

ehx 2017 catalog extra assets catalogs

2017 catalog extra 4 Pedals, 36 Sounds, 100s of Hits. From the game changing B9 and C9 Organ Machines to the KEY9 Electric Piano Machine and **MEL9** Tape Replay Machine, EHX gives you the sounds of enough legendary keyboards to fill a stage and then some Each polyphonic pedal provides a unique collec...

lang:en score:19 filesize: 2.76 M page_count: 8 document date: 2016-12-14