Saved from manuals.plus.
Open the live page for links to other documents and user manuals.

Briggs & Stratton 590556

Briggs & Stratton 590556 Carburetor Instruction Manual

Model: 590556 | Brand: Briggs & Stratton

Introduction

This manual provides essential information for the installation, operation, and maintenance of your Briggs & Stratton 590556 Carburetor. This genuine OEM replacement carburetor is designed for single-cylinder, 9 cubic inch vertical OHV engines, ensuring proper fit and performance to maintain the life of your Briggs & Stratton engine. Please read these instructions carefully before proceeding with any installation or maintenance.

Safety Information

Always prioritize safety when working with engine components and fuel systems. Failure to follow safety precautions can result in serious injury or property damage.

- **Disconnect Spark Plug:** Before performing any service, disconnect the spark plug wire to prevent accidental engine starting.
- **Fuel Handling:** Work in a well-ventilated area. Avoid open flames, sparks, or smoking near fuel. Use an approved container for draining and storing fuel.
- **Eye Protection:** Always wear safety glasses or goggles to protect your eyes.
- **Gloves:** Wear appropriate gloves to protect your hands from fuel and other chemicals.
- **Hot Surfaces:** Engine components can be hot. Allow the engine to cool before servicing.
- **Proper Tools:** Use the correct tools for each task to avoid damage to parts or injury.

Package Contents

Your package should contain the following items:

- Briggs & Stratton 590556 Carburetor (1 unit)
- *Note: Gaskets may or may not be included depending on the specific kit. Inspect your package upon arrival.*

Installation Instructions

This section outlines the general steps for replacing a carburetor. Specific engine configurations may vary. Refer to your engine's service manual for detailed instructions if needed.

Tools Required:

- 7mm and 8mm sockets with ratchet
- Pliers (for fuel line clamp)
- Container for draining fuel
- New gaskets (if not included with carburetor)
- Gasket cement (optional, for sealing)

Procedure:

1. **Prepare the Engine:** Ensure the engine is cool. Disconnect the spark plug wire. Turn off the fuel supply valve, if present.
2. **Drain Fuel:** Place a suitable container under the fuel line. Use pliers to release the fuel line clamp and carefully disconnect the fuel line from the carburetor. Allow all fuel to drain into the container.
3. **Remove Air Filter Assembly:** Disconnect and remove the air filter housing and any associated components to gain access to the carburetor.
4. **Disconnect Linkages:** Carefully disconnect the throttle and choke linkages from the old carburetor. Note their positions for reassembly.
5. **Remove Old Carburetor:** Using appropriate sockets (e.g., 7mm or 8mm), unbolt the carburetor from the engine manifold. Remove any old gaskets.
6. **Inspect and Clean:** Inspect the engine manifold and mounting surfaces for any debris or old gasket material. Clean thoroughly.
7. **Install New Carburetor:**



Figure 1: Front view of the Briggs & Stratton 590556 Carburetor, showing the air intake and fuel inlet.

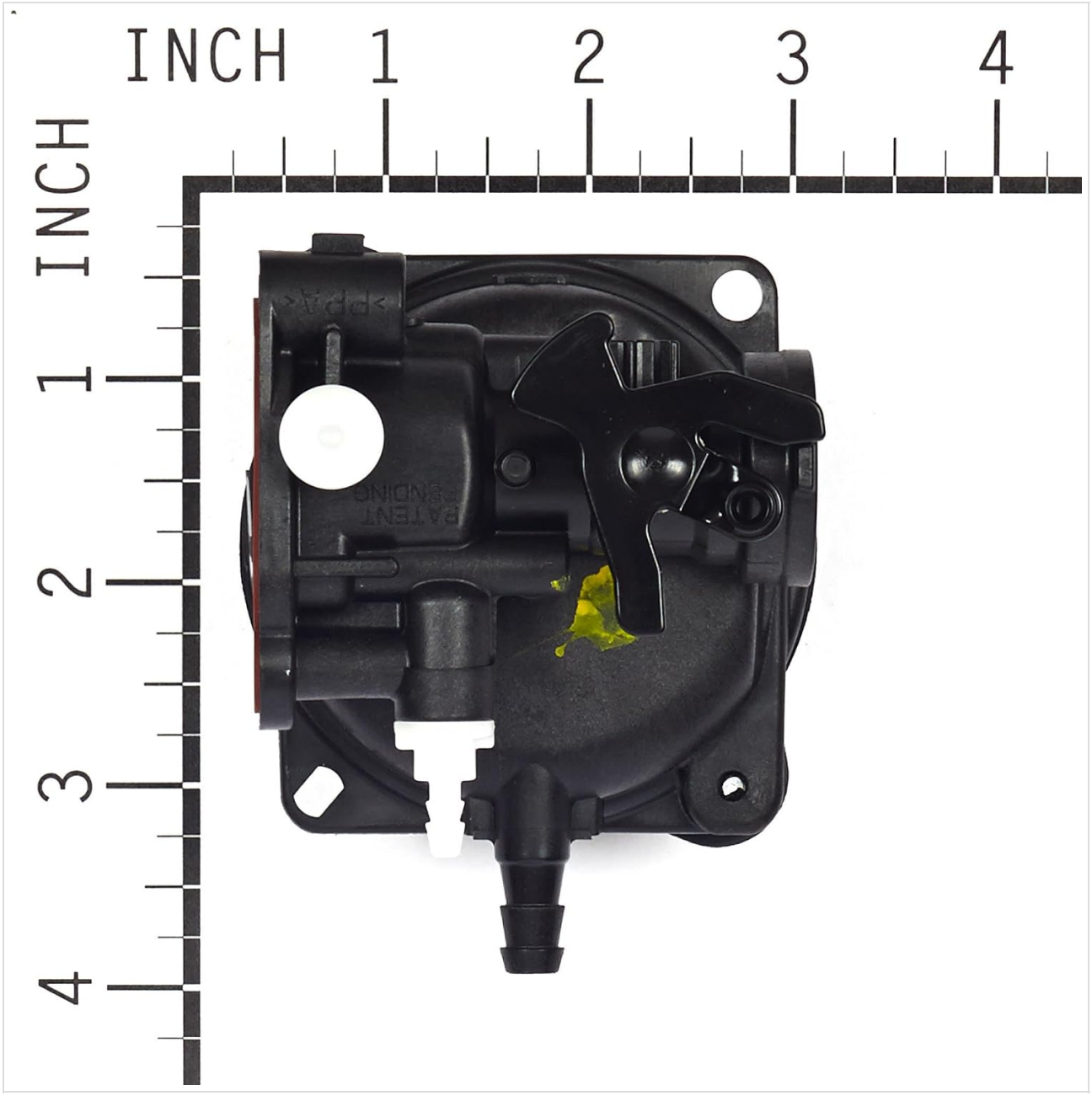

Figure 2: Top view of the carburetor, highlighting the throttle and choke mechanisms.



Figure 3: Side view of the carburetor, illustrating the mounting flange and gasket area.

Place new gaskets on the engine manifold, then carefully position the new Briggs & Stratton 590556 Carburetor. Secure it with the bolts, tightening them evenly to prevent leaks. A small amount of gasket cement can be used for an improved seal, if desired.

8. **Reconnect Linkages:** Reattach the throttle and choke linkages to their correct positions on the new carburetor. Ensure they move freely.
9. **Reconnect Fuel Line:** Reconnect the fuel line to the carburetor and secure it with the clamp.
10. **Reinstall Air Filter Assembly:** Reattach the air filter housing and any other components removed earlier.
11. **Reconnect Spark Plug:** Reconnect the spark plug wire.

Operating Instructions

After installation, follow these steps to start your engine:

1. **Refill Fuel Tank:** Fill the engine's fuel tank with fresh, appropriate fuel.
2. **Prime Carburetor:** Press the primer bulb (if equipped) 3-5 times until fuel is visible or the bulb feels firm.

3. **Start Engine:** Set the choke (if applicable) and pull the starter cord or engage the electric starter. The engine should start and run smoothly.

Maintenance

Proper maintenance extends the life of your carburetor and engine.

- **Fuel Quality:** Always use fresh, clean fuel. Ethanol in fuel can cause issues over time. Consider using ethanol-free fuel or a fuel stabilizer.
- **Seasonal Storage:** Before long-term storage, either run the engine until it runs out of fuel or drain the fuel tank and carburetor bowl to prevent fuel degradation and clogging.
- **Air Filter:** Regularly inspect and clean or replace the air filter to ensure proper air-fuel mixture.

Troubleshooting

If you encounter issues after carburetor replacement, consider the following:

- **Engine Not Starting:**
  - Check for fuel in the tank.
  - Ensure the spark plug wire is securely connected.
  - Verify the primer bulb is working and fuel is reaching the carburetor.
  - Inspect spark plug for fouling or damage.
- **Engine Runs Roughly or Stalls:**
  - Check for proper air filter installation.
  - Ensure all linkages are correctly connected and moving freely.
  - Verify there are no fuel leaks around the carburetor or fuel lines.
  - Consider if old fuel or debris might be causing partial clogging.
- **Fuel Leaks:**
  - Ensure carburetor mounting bolts are tightened correctly.
  - Check that gaskets are properly seated and not damaged.
  - Inspect fuel lines and clamps for cracks or loose connections.

If troubleshooting steps do not resolve the issue, consult a qualified service technician.

Specifications

Part Number	590556
Brand	Briggs & Stratton
Flange Type	Bolt On
Specific Uses	Performance, Replacement for single cylinder, 9 cu. in. vertical OHV engines
Item Weight	16 ounces
UPC	024847218046

Warranty and Support

As a genuine OEM authorized part, the Briggs & Stratton 590556 Carburetor is manufactured to high standards. For specific warranty information or technical support, please refer to the official Briggs & Stratton website or contact their customer service directly. Always ensure you are using genuine parts for optimal performance and to maintain any existing engine warranties.

Ask a question about this manual

Ask about setup, troubleshooting, compatibility, parts, safety, or missing instructions. Manuals+ will review the question and use this page's manual context to help answer it.

Name

Anonymous

Email

you@example.com

After a successful submission, we securely hash the supplied account or form email before sending it to Microsoft Advertising for conversion attribution. Privacy details.

Question

Example: How do I reset this device or fix this error?

Details

Model number, symptoms, what you tried, or the section of the manual you are using.

Submit question

Open the live page

https://manuals.plus/asin/B01A0MZE26

More documents and user manuals: **https://manuals.plus/**