Saved from manuals.plus.
Open the live page for links to other documents and user manuals.

Briggs & Stratton 704038

Briggs & Stratton 704038 Screw (3/8-16 x 1) Instruction Manual

Official Guide for Installation, Usage, and Maintenance

Introduction Product Overview Installation Usage Maintenance Troubleshooting Specifications Warranty Support

1. Introduction

This manual provides essential information for the proper installation, usage, and maintenance of the Briggs & Stratton 704038 Screw. This component is an Original Equipment Manufacturer (OEM) authorized replacement part designed to ensure compatibility and performance with various Briggs & Stratton models. Please read these instructions carefully before proceeding with any installation or maintenance.

2. Product Overview

The Briggs & Stratton 704038 is a specific screw designed for fastening applications within Briggs & Stratton equipment. It is manufactured to precise specifications to ensure a secure fit and reliable function as a replacement part. This screw is typically used in lawn mower deck assemblies or other outdoor power tool components.



Figure 1: The Briggs & Stratton 704038 Screw, a hexagonal head bolt with a washer face and threaded shaft. This image shows the screw's metallic finish and thread pattern.

3. Installation

3.1 Safety Precautions

- Always wear appropriate personal protective equipment (PPE), such as safety glasses and gloves, during installation.
- Ensure the equipment is turned off, disconnected from power sources, and any moving parts have come to a complete stop before beginning work.
- Refer to the specific equipment's service manual for detailed instructions regarding the component being fastened.

3.2 Installation Steps

1. **Identify the Fastening Point:** Locate the specific area on your Briggs & Stratton equipment where the 704038 screw is to be installed.
2. **Prepare the Area:** Clean any debris or old threadlocker from the threaded hole and the mating surfaces.

3. **Position the Component:** Place the component to be secured into its correct position.
4. **Insert the Screw:** Carefully insert the Briggs & Stratton 704038 screw into the designated hole.
5. **Tighten the Screw:** Using an appropriate wrench or socket, hand-tighten the screw until it is snug. Then, tighten to the torque specification provided in your equipment's service manual. *Overtightening can strip threads or damage components; undertightening can lead to loosening during operation.*
6. **Verify Security:** After tightening, ensure the component is securely fastened and does not exhibit any play.

4. Usage

Once correctly installed, the Briggs & Stratton 704038 screw functions as a permanent fastener, securing components together. Its primary role is to maintain the structural integrity and proper alignment of the parts it connects within the equipment. No further operational steps are required for the screw itself after installation.

5. Care and Maintenance

To ensure the longevity and continued performance of the Briggs & Stratton 704038 screw and the components it secures, periodic inspection is recommended:

- **Visual Inspection:** Regularly check the screw for signs of corrosion, rust, or physical damage (e.g., stripped head, bent shaft).
- **Tightness Check:** Periodically verify that the screw remains properly tightened. If any loosening is detected, re-tighten to the manufacturer's specified torque.
- **Cleaning:** If the equipment operates in dusty, dirty, or corrosive environments, clean the screw and surrounding area to prevent buildup that could lead to corrosion or hinder future removal.
- **Replacement:** If the screw shows significant wear, damage, or corrosion, it should be replaced with a new OEM part (Briggs & Stratton 704038) to maintain equipment safety and performance.

6. Troubleshooting

This section addresses common issues that may arise with the Briggs & Stratton 704038 screw.

Problem	Possible Cause	Solution
Screw does not fit into the hole.	Incorrect screw size or damaged threads in the receiving component.	Verify the part number (704038) is correct for your application. Inspect the receiving threads for damage; if damaged, repair or replace the component.
Screw head strips during tightening.	Using the wrong tool, worn tool, or excessive torque.	Ensure you are using the correct size and type of wrench/socket. Replace the stripped screw and use proper torque specifications.
Screw loosens over time.	Insufficient tightening torque, vibration, or missing lock washer (if applicable).	Re-tighten the screw to the specified torque. Consider using a thread-locking compound or a lock washer if the application allows and requires it.
Screw is corroded or rusted.	Exposure to moisture or harsh chemicals without protection.	Clean the area and apply a rust preventative if appropriate for the application. If corrosion is severe, replace the screw.

7. Specifications

The following are the key specifications for the Briggs & Stratton 704038 Screw:

Attribute	Detail
Part Number	704038
Brand	Briggs & Stratton
Type	OEM Authorized Replacement Part
Material	Metallic (*Note: Product data listed 'Plastic', but the item is a metal screw*)
Size	3/8-16 x 1 inch (Diameter, Thread Pitch, Length)
Item Weight	0.8 ounces
Product Dimensions	0.75 x 4 x 5.38 inches (Packaging dimensions)
UPC	047282005859
Manufacturer	Briggs and Stratton

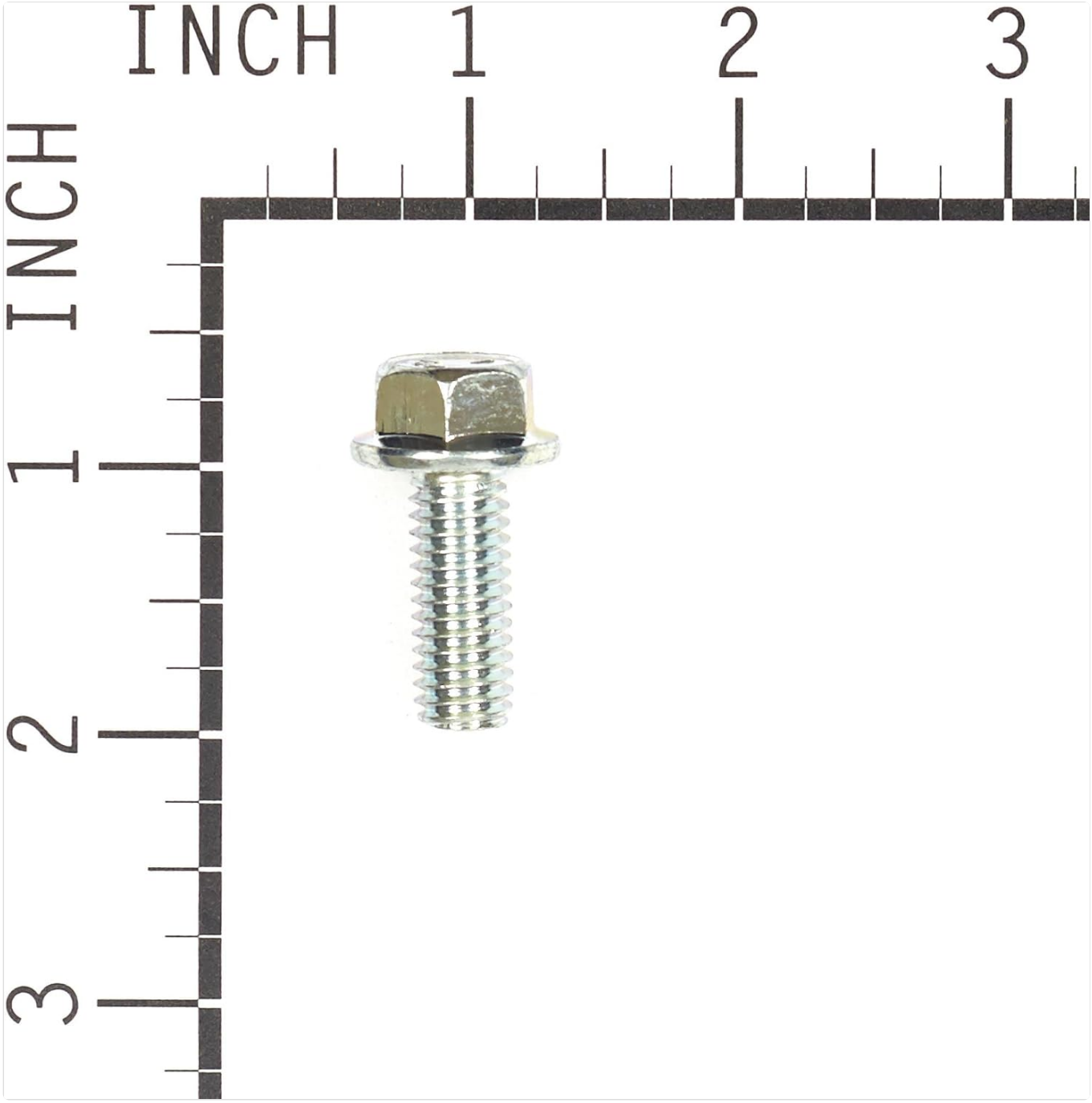

Figure 2: Dimensional view of the Briggs & Stratton 704038 Screw, showing its length and diameter against an inch ruler for scale. This helps confirm the 1-inch length.

8. Warranty Information

As an Original Equipment Manufacturer (OEM) part, the Briggs & Stratton 704038 Screw is typically covered by the standard warranty policies of Briggs & Stratton for genuine replacement parts. Specific warranty terms, conditions, and duration may vary. For detailed warranty information, please refer to the official Briggs & Stratton website or contact their customer service directly. Keep your purchase receipt as proof of purchase.

9. Customer Support

If you have any questions regarding the Briggs & Stratton 704038 Screw, its application, or require technical assistance, please contact Briggs & Stratton customer support. You can typically find contact information, including phone numbers and online support portals, on the official Briggs & Stratton website:

- **Official Website:** www.briggsandstratton.com

Service Locator: Use the service locator tool on their website to find authorized service dealers near you.

When contacting support, please have the part number (704038) and details of your equipment model readily available.

© 2023 Briggs & Stratton. All rights reserved. This manual is for informational purposes only.

Ask a question about this manual

Ask about setup, troubleshooting, compatibility, parts, safety, or missing instructions. Manuals+ will review the question and use this page's manual context to help answer it.

Name

Anonymous

Email

you@example.com

After a successful submission, we securely hash the supplied account or form email before sending it to Microsoft Advertising for conversion attribution. Privacy details.

Question

Example: How do I reset this device or fix this error?

Details

Model number, symptoms, what you tried, or the section of the manual you are using.

Submit question

Open the live page

https://manuals.plus/asin/B019WEFS88

More documents and user manuals: **https://manuals.plus/**