Saved from manuals.plus.
Open the live page for links to other documents and user manuals.

Fulgor Milano CPH 1124 G WK TC X

Fulgor Milano CPH 1124 G WK TC X Built-in Gas Cooktop User Manual

Model: CPH 1124 G WK TC X

1. Introduction

Thank you for choosing the Fulgor Milano CPH 1124 G WK TC X Built-in Gas Cooktop. This manual provides essential information for the safe and efficient installation, operation, and maintenance of your new appliance. Please read these instructions carefully before using the cooktop and keep them for future reference.

2. Safety Information

WARNING: Improper installation, adjustment, alteration, service, or maintenance can cause injury or property damage. Refer to this manual. For assistance or additional information, consult a qualified installer, service agency, or the gas supplier.

- Ensure proper ventilation in the kitchen area.
- Do not store or use gasoline or other flammable vapors and liquids in the vicinity of this or any other appliance.
- Never use the appliance as a space heater.
- Keep children away from the appliance during operation.
- In case of a gas leak, immediately shut off the gas supply, open windows, and do not operate any electrical switches. Contact a qualified technician.
- This appliance is equipped with a double gas detection and shut-off system for enhanced safety.

3. Setup and Installation

The Fulgor Milano CPH 1124 G WK TC X is a built-in gas cooktop designed for recessed installation. Installation must be performed by a qualified technician in accordance with local regulations and standards.

3.1. Installation Requirements

- Ensure the countertop material is heat-resistant.
- Provide adequate clearance from adjacent surfaces and overhead cabinets.
- Connect to a suitable gas supply and electrical outlet (for electronic ignition).

3.2. Cut-out Dimensions

Refer to the technical drawings below for precise cut-out dimensions required for installation.

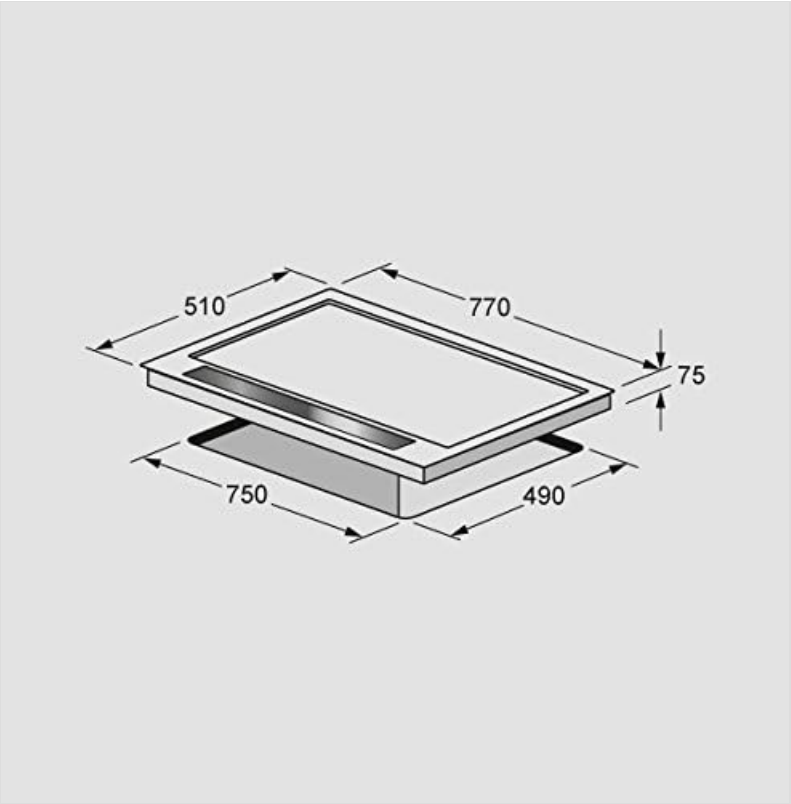

Figure 1: Technical drawing illustrating the dimensions for a 770mm wide cooktop. The overall width is 770mm, depth 510mm, and height 75mm. The required cut-out dimensions are 750mm in width and 490mm in depth.

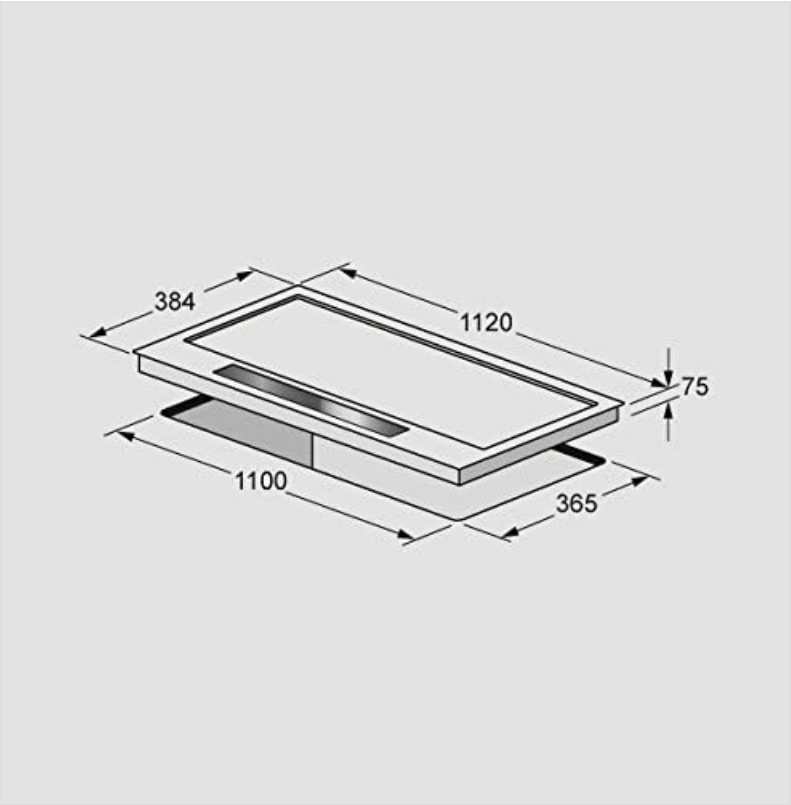

Figure 2: Technical drawing illustrating the dimensions for an 1120mm wide cooktop. The overall width is 1120mm, depth 384mm, and height 75mm. The required cut-out dimensions are 1100mm in width and 365mm in depth.

The cooktop can be installed flush-mounted or semi-flush mounted into the countertop.

4. Operating Instructions

Your Fulgor Milano gas cooktop features 5 burners, including a powerful 4.0 kW Wok burner, and touch controls for precise operation.

4.1. Ignition

This cooktop features electronic ignition. To ignite a burner:

1. Press and turn the corresponding control knob counter-clockwise to the maximum flame setting.
2. The electronic igniter will automatically spark, lighting the burner.
3. Hold the knob for a few seconds after ignition to allow the thermocouple to heat up and activate the flame failure device.
4. Adjust the flame to the desired intensity. If the flame extinguishes, the automatic re-ignition function will attempt to relight it.

4.2. Burner Control

- **Touch Control:** The cooktop features touch controls for precise flame adjustment and other functions.
- **Low-Temperature Cooking:** Special settings are available for low-temperature cooking, ideal for delicate dishes or keeping food warm.
- **Timer Function:** A timer can be set to automatically switch off a burner after a specified duration (up to 1 hour).

4.3. Safety Features

- **Flame Failure Device:** Automatically cuts off the gas supply if the flame accidentally extinguishes.
- **Child Safety Lock:** A switch is provided to prevent accidental use of the cooktop.
- **Residual Heat Indicator (H):** Indicates when a cooking zone is still hot after use.

5. Maintenance and Cleaning

Regular cleaning and maintenance will ensure the longevity and optimal performance of your cooktop.

5.1. Daily Cleaning

- Allow the cooktop to cool completely before cleaning.
- Wipe the stainless steel surface with a soft cloth and mild detergent. Avoid abrasive cleaners or scouring pads.
- Clean the cast iron grates and burner caps with warm soapy water. Dry thoroughly to prevent rust.

5.2. Deep Cleaning

- For stubborn stains on stainless steel, use a specialized stainless steel cleaner, following the product instructions.
- Periodically check burner ports for blockages and clean with a soft brush if necessary.

6. Troubleshooting

If you encounter issues with your cooktop, refer to the following common troubleshooting steps:

Problem	Possible Cause	Solution
Burner does not ignite	No gas supply, igniter dirty, power outage	Check gas valve, clean igniter, check power supply
Flame is uneven or yellow	Burner ports blocked, incorrect gas pressure	Clean burner ports, contact a qualified technician to check gas pressure
Gas smell detected	Gas leak	Immediately shut off gas, ventilate area, do not operate electrical switches, contact emergency services/technician

If the problem persists after attempting these solutions, please contact Fulgor Milano customer support or a qualified service technician.

7. Specifications

Feature	Detail
Brand	Fulgor Milano
Model Number	CPH 765 GWK TC X (Part Number: CPH 1124 G WK TC X)
Heating Elements	5 (including 1 Wok burner 4.0 kW)
Color	Black / Stainless Steel
Power Source	Gas
Fuel Type	Gas
Heating Surface Material	Stainless Steel
Ignition Type	Electronic
Installation Type	Built-in (Recessed)
Control Type	Touch Control
Grates	Cast Iron
Package Weight	21.72 kg
GTIN/UPC	08019801008797

8. Warranty and Support

For warranty information, technical support, or service requests, please contact Fulgor Milano customer service or refer to the official Fulgor Milano website. Keep your purchase receipt as proof of purchase for warranty claims.
Fulgor Milano Official Website: www.fulgormilano.com

© 2023 Fulgor Milano. All rights reserved. This manual is subject to change without notice.

Ask a question about this manual

Ask about setup, troubleshooting, compatibility, parts, safety, or missing instructions. Manuals+ will review the question and use this page's manual context to help answer it.

Name

Anonymous

Email

you@example.com

After a successful submission, we securely hash the supplied account or form email before sending it to Microsoft Advertising for conversion attribution. Privacy details.

Question

Example: How do I reset this device or fix this error?

Details

Model number, symptoms, what you tried, or the section of the manual you are using.

Submit question

Open the live page

https://manuals.plus/asin/B017M5B8UG

More documents and user manuals: **https://manuals.plus/**