Manuals+

Q & A | Deep Search | Upload

Hunter 606800

Hunter Solenoid 434100 Instruction Manual

Model: 606800

INTRODUCTION

This manual provides comprehensive instructions for the installation, operation, and maintenance of the Hunter Solenoid 434100. This solenoid is designed as a direct replacement for all Hunter Irrigation Valves, including ADV, PGV, ICV, IBV, and HPV series, facilitating the connection between the valve and the irrigation timer. Please read this manual thoroughly before proceeding with installation or operation to ensure proper function and longevity of the product.

Image: Hunter 24VAC Solenoid 434100. This image displays the black solenoid body with "Hunter 24VAC SOLENOID" printed on it, connected to two red wires with exposed ends, coiled on a white background.

Setup and Installation

Before beginning installation, ensure the main water supply to the irrigation system is turned off and the irrigation controller is powered down to prevent accidental activation or electrical shock.

Tools Required:

- Adjustable wrench or pliers
- Wire strippers (if wires need trimming)
- Waterproof wire connectors

Installation Steps:

1. **Locate the Valve:** Identify the irrigation valve requiring solenoid replacement.
2. **Disconnect Old Solenoid:** Carefully disconnect the wires from the existing solenoid. Note the wiring configuration.
3. **Remove Old Solenoid:** Unscrew the old solenoid from the valve body by turning it counter-clockwise. Be gentle to avoid damaging the valve threads.
4. **Inspect Valve:** Check the valve body's threads for any debris or damage. Clean if necessary.
5. **Install New Solenoid:** Screw the new Hunter Solenoid 434100 into the valve body clockwise until it is hand-tight. Do not overtighten, as this can damage the solenoid or valve.
6. **Connect Wiring:** Connect the two red wires of the new solenoid to the corresponding wires from the irrigation controller. Typically, one wire connects to the common wire and the other to the zone wire. Use waterproof wire

connectors to ensure secure and weather-resistant connections.

7. **Test System:** Once the solenoid is installed and wired, restore power to the irrigation controller and turn on the main water supply. Test the specific zone to ensure the valve opens and closes correctly.

Note: For optimal performance and longevity, ensure all electrical connections are properly sealed against moisture.

Operation

The Hunter Solenoid 434100 is an electromagnetic device that controls the opening and closing of an irrigation valve. It operates in conjunction with an irrigation controller (timer).

How it Works:

- When the irrigation controller sends a 24V AC electrical signal to the solenoid, an electromagnetic field is generated.
- This field lifts a plunger inside the solenoid, which in turn allows water pressure to activate the valve diaphragm, opening the valve and allowing water flow to the irrigation zone.
- When the electrical signal is removed, the electromagnetic field collapses, and the plunger returns to its resting position, closing the valve and stopping water flow.

To operate your irrigation system, refer to your specific irrigation controller's manual for programming and scheduling instructions. The solenoid itself does not require direct user interaction for operation beyond its initial installation.

Maintenance

Hunter solenoids are designed for durability and require minimal maintenance. However, periodic checks can help ensure optimal performance and extend the lifespan of your irrigation system.

Recommended Maintenance:

- **Annual Inspection:** Before the irrigation season begins, inspect all solenoids for any visible signs of damage, such as cracked casings or frayed wires.
- **Wire Connections:** Ensure all wire connections are secure and free from corrosion. Re-seal waterproof connectors if necessary.
- **Debris Removal:** If a valve is not operating correctly, the solenoid plunger might be obstructed by debris. Turn off the water and power, carefully unscrew the solenoid, and inspect the plunger and its housing for any foreign material. Clean gently if needed.
- **Winterization:** In regions subject to freezing temperatures, ensure your irrigation system, including solenoids and valves, is properly winterized to prevent freeze damage. Consult your irrigation system's winterization guide.

Troubleshooting

Common Solenoid Issues and Solutions

Problem	Possible Cause	Solution
Valve does not open (no water flow)	• No power to solenoid • Faulty wiring connection • Clogged solenoid plunger • Defective solenoid	• Check irrigation controller for power and programming. • Inspect and secure wire connections. • Remove solenoid and clean plunger/housing. • Replace solenoid.

Problem	Possible Cause	Solution
Valve does not close (continuous water flow)	• Debris in valve diaphragm • Solenoid plunger stuck open • Defective solenoid	• Turn off water, disassemble valve, clean diaphragm. • Remove solenoid, check plunger for free movement, clean. • Replace solenoid.
Solenoid hums but valve doesn't open	• Low voltage • Solenoid plunger obstructed	• Check transformer and wiring for proper voltage. • Remove solenoid and clean plunger/housing.

If troubleshooting steps do not resolve the issue, contact a qualified irrigation technician or Hunter customer support.

Specifications

Model Number: 606800

Part Number: 434100

Voltage: 24V AC

Compatibility: Hunter ADV, PGV, ICV, IBV, HPV series valves

Package Quantity: Pack of 10 (as per product listing)

Package Dimensions: 6 x 4 x 4 inches

Item Weight: 3.2 pounds

Manufacturer: Hunter Industries

Warranty Information

Specific warranty details for the Hunter Solenoid 434100 are typically provided with the product packaging or can be found on the official Hunter Industries website. Generally, Hunter products come with a limited warranty covering defects in materials and workmanship under normal use and service. Please retain your proof of purchase for warranty claims. For detailed warranty terms and conditions, please visit theHunter Industries official website or contact their customer support.

Customer Support

If you require further assistance, have questions not covered in this manual, or need to report an issue, please contact Hunter Industries customer support.
Hunter Industries Contact Information:

Website: www.hunterindustries.com

Support Page: www.hunterindustries.com/support

Please refer to the website for current phone numbers and operating hours.

When contacting support, please have your product model number (606800) and any relevant purchase information ready.

© 2023 Hunter Industries. All rights reserved.

Related Documents - 606800

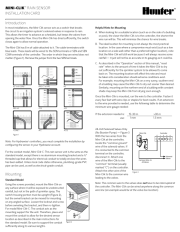	Hunter Mini-Clik Rain Sensor Installation Guide Comprehensive installation and operation guide for the Hunter Mini-Clik rain sensor, covering wiring, mounting, adjustments, and troubleshooting for irrigation systems. Includes details on controller compatibility and sensor sensitivity.
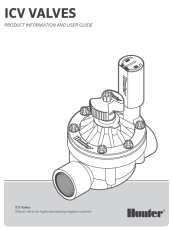	Hunter ICV Valves: Product Information and User Guide Comprehensive guide to Hunter ICV valves, covering features, operation, installation, and troubleshooting for commercial and residential irrigation systems. Learn about Accu Sync pressure regulators and product specifications.
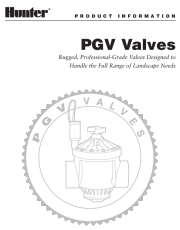	Hunter PGV Valves: Rugged, Professional-Grade Irrigation Valves Discover the Hunter PGV Valves, designed for durability and performance in all landscape irrigation needs. Learn about features like Accu-Set™ pressure regulation, heavy-duty solenoids, and versatile configurations.
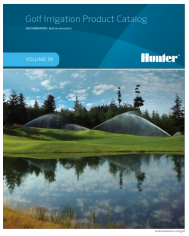	Hunter Golf Irrigation Product Catalog - Volume 39 Discover the latest in golf course irrigation with Hunter Industries' Volume 39 Product Catalog. This comprehensive guide features advanced rotors, intelligent control systems like Pilot Command Center Software, efficient valves, and professional lighting solutions. Hunter Industries is committed to delivering high-performance, water-efficient solutions for golf course management, backed by extensive support and training.
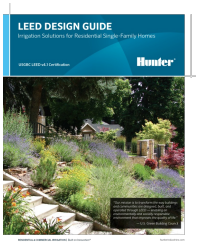	LEED Design Guide: Hunter Irrigation Solutions for Residential Single-Family Homes A guide from Hunter Industries on using smart irrigation solutions to achieve LEED v4.1 certification for residential single-family homes, focusing on water efficiency, reclaimed water, and recycled materials.

[Hunter ICV-101G-FS-DC Valve Technical Specifications and Flow Data]
Detailed specifications, dimensions, shipping information, and flow rate data for the Hunter ICV-101G-FS-DC irrigation valve, including pressure loss charts.

Documents - Hunter – 606800

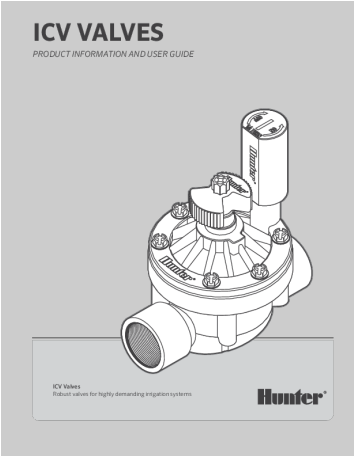

[Hunter ICV Valves: Product Information and User Guide]
Comprehensive guide to Hunter ICV valves, covering features, operation, installation, and troubleshooting for commercial and residential irrigation systems. Learn about Accu Sync pressure regulators and product specifications.
lang:en score:34 filesize: 6.28 M page_count: 20 document date: 2021-01-12

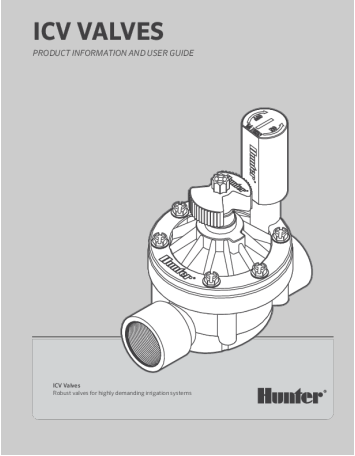

[pdf] Troubleshooting Guide Parts List Guide
One moment please ICV Solenoid Valve Product Guide irrigationexpress co nz 2021 04 |||
ICV VALVES PRODUCT INFORMATION AND USER GUIDE ICV Valves Robust valves for highly demanding irrigati ... t Ring 14 Filter Sentry Tag, Yellow 10-Pack 15 Purple Reclaimed ID Tag 10-Pack CATALOG NO. **606800** 458200 262600 364400 561400 386900 561200SP 561205SP 387200 387700 387900 560900 386000 38710...
lang:en score:29 filesize: 6.28 M page_count: 20 document date: 2021-01-12

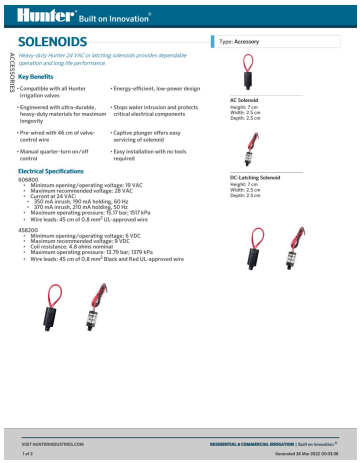

Hunter Built on Innovation

SOLENOIDS

Type: Accessory

Heavy-duty Hunter 24 VAC or latching solenoids provides dependable operation and long life performance.

Key Benefits

- Compatible with all Hunter irrigation valves
- Engineered with ultra-durable, heavy-duty materials for maximum longevity
- Pre-wired with 46 cm of valve-control wire
- Manual quarter-turn on/off control
- Energy-efficient, low-power design
- Stops water intrusion and protects critical electrical components
- Captive plunger offers easy servicing of solenoid
- Easy installation with no tools required

Electrical Specifications

606800
- Minimum opening/operating voltage: 19 VAC
- Maximum recommended voltage: 28 VAC
- Current at 24 VAC:
  - 350 mA inrush, 190 mA holding, 60 Hz
  - 370 mA inrush, 210 mA holding, 50 Hz
- Maximum operating pressure: 15.77 bar; 1577 kPa
- Wire leads: 45 cm of 0.8 mm² UL-approved wire

458200
- Minimum opening/operating voltage: 6 VDC
- Maximum recommended voltage: 9 VDC
- Coil resistance: 4.8 ohms nominal
- Maximum operating pressure: 13.79 bar; 1379 kPa
- Wire leads: 45 cm of 0.8 mm² Black and Red UL-approved wire

AC Solenoid
Height: 7 cm
Width: 2.5 cm
Depth: 2.5 cm

DC-Latching Solenoid
Height: 7 cm
Width: 2.5 cm
Depth: 2.5 cm

[pdf] User Manual Specifications Accessories

Solenoids SOLENOIDS Hunter Industries Manual quarter turn on off control User Installed Options Model Description 2 station Bluetooth battery controller NODE BT 400 hunter industries solenoids 2021 09 08 hunterindustries print 171006 |||

ACCESSORIES Built on Innovation SOLENOIDS Heavy-duty Hunter 24 VAC or latching solenoids provides ... l quarter-turn on/off control Easy installation with no tools required Electrical Specifications **606800** Minimum opening/operating voltage: 19 VAC Maximum recommended voltage: 28 VAC Current at 2...

lang:en score:28 filesize: 125.75 K page_count: 2 document date: 2022-03-26

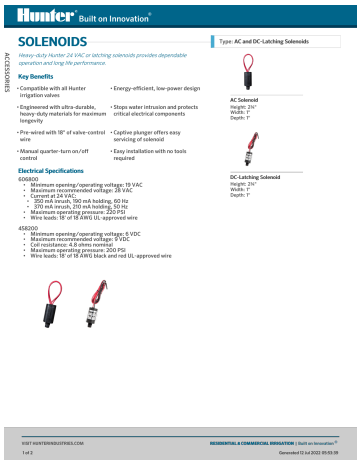

Hunter Built on Innovation

SOLENOIDS

Type: AC and DC-Latching Solenoids

Heavy-duty Hunter 24 VAC or latching solenoids provides dependable operation and long life performance.

Key Benefits

- Compatible with all Hunter irrigation valves
- Engineered with ultra-durable, heavy-duty materials for maximum longevity
- Pre-wired with 18" of valve-control wire
- Manual quarter-turn on/off control
- Energy-efficient, low-power design
- Stops water intrusion and protects critical electrical components
- Captive plunger offers easy servicing of solenoid
- Easy installation with no tools required

Electrical Specifications

606800
- Minimum opening/operating voltage: 19 VAC
- Maximum recommended voltage: 28 VAC
- Current at 24 VAC:
  - 350 mA inrush, 190 mA holding, 60 Hz
  - 370 mA inrush, 210 mA holding, 50 Hz
- Maximum operating pressure: 220 PSI
- Wire leads: 10' of 18 AWG UL approved wire

458200
- Minimum opening/operating voltage: 6 VDC
- Maximum recommended voltage: 9 VDC
- Coil resistance: 4.8 ohms nominal
- Maximum operating pressure: 200 PSI
- Wire leads: 18' of 18 AWG black and red UL approved wire

AC Solenoid
Height: 2¼"
Width: 1"
Depth: 1"

DC-Latching Solenoid
Height: 2¼"
Width: 1"
Depth: 1"

[pdf] User Manual Specifications Accessories

Solenoids SOLENOIDS Hunter Industries 2022 03 14 — Electrical Specifications 606800 Minimum opening operating voltage 19 VAC Maximum recommended 28 Current at 24 hunter industries solenoids 2021 09 hunterindustries print 170646 |||

ACCESSORIES Built on Innovation SOLENOIDS Heavy-duty Hunter 24 VAC or latching solenoids provides ... l quarter-turn on/off control Easy installation with no tools required Electrical Specifications **606800** Minimum opening/operating voltage: 19 VAC Maximum recommended voltage: 28 VAC Current at 2...

lang:en score:27 filesize: 125.97 K page_count: 2 document date: 2022-07-12

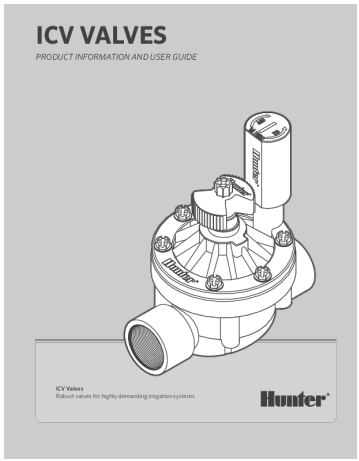

ICV VALVES

PRODUCT INFORMATION AND USER GUIDE

ICV Valves
Robust valves for highly demanding irrigation systems

Hunter

[pdf] Troubleshooting Guide Parts List Guide

ICV VALVES USER GUIDEHunter 1 2 Valve Glass Filled Nylon Globe w Flow Controlrc 154 icv product guidedripworks content rc guide |||

ICV VALVES PRODUCT INFORMATION AND USER GUIDE ICV Valves Robust valves for highly demanding irrigati ... t Ring 14 Filter Sentry Tag, Yellow 10-Pack 15 Purple Reclaimed ID Tag 10-Pack CATALOG NO. **606800** 458200 262600 364400 561400 386900 561200SP 561205SP 387200 387700 387900 560900 386000 38710...

lang:en score:27 filesize: 6.28 M page_count: 20 document date: 2021-01-12

[pdf] User Manual Parts List Specifications

Replacement Parts List System off Manual operation Settings Advanced features International Kit Includes Owner s French Italian German Hunter ReplacementPartsPriceList dom hunterindustries sites default files

Replacement Parts List RESIDENTIAL COMMERCIAL IRRIGATION Built on Innovation EFFECTIVE JANUARY ... iaphragm Spring Diaphragm Assembly Diaphragm Support Ring Flow Control Handle Black CATALOG NO. **606800** 458200 262600 364400 427300 556100 556000 266000SP 332100SP 331300SP 269200 10 VALVES 1 4 2...

lang:i-klingon score:27 filesize: 43.18 M page_count: 103 document date: 2020-04-16

[pdf] User Manual Parts List Specifications

Replacement Parts List System off Manual operation Settings Advanced features International Kit Includes Owner s French Italian German Portuguese Hunter ReplacementPartsList hunterindustries sites default files

Replacement Parts List RESIDENTIAL COMMERCIAL IRRIGATION Built on Innovation EFFECTIVE JANUARY ... iaphragm Spring Diaphragm Assembly Diaphragm Support Ring Flow Control Handle Black CATALOG NO. **606800** 458200 262600 364400 427300 556100 556000 266000SP 332100SP 331300SP 269200 10 1 4 2 3 5 6 ...

lang:no score:27 filesize: 43.55 M page_count: 108 document date: 2020-12-11

[pdf]

View 606800 hunterindustries es print node 433261 |||

606800 Marca: RIEGO RESIDENCIAL Y COMERCIAL Lnea de productos: Vlvulas Modelo de productos: Solenoids SKU: **606800** Descripcin: Solenoide AC para todas las vlvulas de riego Hunter UPC-A: 0611698039670 Cartn maestro: 42 Pal terrestre: 4032 Pal ocenico: 6552 Copyright 2024 Hunter Industries Inc. Hunter...

lang:no score:26 filesize: 61.56 K page_count: 1 document date: 2024-05-19

Hunter Built on Innovation

606800

Marca: IRRIGAÇÃO RESIDENCIAL E COMERCIAL
Linha de produtos: Válvulas
Modelo de produto: Solenoids
SKU: 606800
Descrição: Solenoide CA para todas as válvulas de irrigação da Hunter
UPC-A: 0611698039670
Caixa principal: 42
Palete terrestre: 4032
Palete oceânico: 6552

Copyright © 2024 Hunter Industries Inc. Hunter, the Hunter logo, and other marks are trademarks of Hunter Industries Inc., registered in the U.S. and certain other countries.

https://www.hunterindustries.com/pt/irrigation-product/solenoide/606800
051924

[pdf]

View 606800 hunterindustries pt print node 433261 |||

606800 Marca: IRRIGAO RESIDENCIAL E COMERCIAL Linha de produtos: Vlvulas Modelo de produto: Solenoids SKU: **606800** Descrio: Solenoide CA para todas as vlvulas de irrigao da Hunter UPC-A: 0611698039670 Caixa principal: 42 Palete terrestre: 4032 Palete ocenico: 6552 Copyright 2024 Hunter Industries In...

lang:pt score:26 filesize: 62.49 K page_count: 1 document date: 2024-05-19

Hunter Built on Innovation

606800

Marque: ARROSAGE RSIDENTIEL ET MUNICIPAL
Gamme de produit: Électrovannes
Modèle de produit: Solenoids
Référence: 606800
Description: Solénoïde CA pour toutes les électrovannes d'arrosage Hunter
UPC-A: 0611698039670
Carton principal: 42
Palette pour transport terrestre: 4032
Palette pour transport maritime: 6552

Copyright © 2024 Hunter Industries Inc. Hunter, the Hunter logo, and other marks are trademarks of Hunter Industries Inc., registered in the U.S. and certain other countries.

https://www.hunterindustries.com/fr/irrigation-product/solenoids/606800
051924

[pdf]

View 606800 hunterindustries fr print node 433261 |||

606800 Marque: ARROSAGE RSIDENTIEL ET MUNICIPAL Gamme de produit: lectrovannes Modle de produit: Solenoids Rfrence: **606800** Description: Solnode CA pour toutes les lectrovannes d arrosage Hunter UPC-A: 0611698039670 Carton principal: 42 Palette pour transport terrestre: 4032 Palette pour transport ma...

lang:it score:26 filesize: 61.92 K page_count: 1 document date: 2024-05-19

Hunter Built on Innovation

606800

[illegible]
[illegible]
[illegible]enoids
SKU: 606800
[illegible]Hunter [illegible]
UPC-A: 0611698039670
[illegible]
[illegible]2
[illegible]2

Copyright © 2025 Hunter Industries Inc. Hunter, the Hunter logo, and other marks are trademarks of Hunter Industries Inc., registered in the U.S. and certain other countries.

https://www.hunterirrigation.com/cn/node/433261
091025

[pdf]

View 606800 hunterindustries cn print node 433261 |||

606800 : : So:lenoids SKU:**606800** : Hunter UPC-A: 0611698039670 42: 403: 2 655: 2 Copyright 2025 Hunter Industries Inc. Hunter, the Hunter logo, and other marks are trademarks of Hunter Industries Inc., registered in the U.S. and certain other countries. https://www.hunterirrigation.com/cn/node/43...

lang:it score:26 filesize: 56.83 K page_count: 1 document date: 2025-03-10

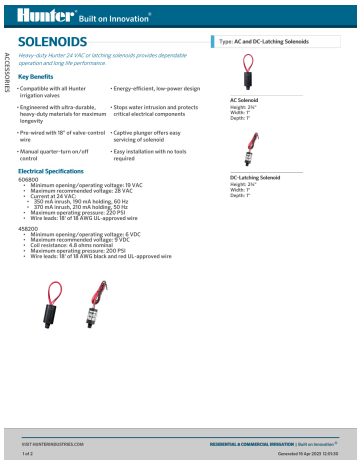

Hunter Built on Innovation

SOLENOIDS

Type: AC and DC-Latching Solenoids

Heavy-duty Hunter 24 VAC or latching solenoids provides dependable operation and long life performance.

Key Benefits

- Compatible with all Hunter irrigation valves
- Energy-efficient, low-power design
- Engineered with ultra-durable, heavy-duty materials for maximum longevity
- Stops water intrusion and protects critical electrical components
- Pre-wired with 18" of valve-control wire
- Captive plunger offers easy servicing of solenoid
- Manual quarter-turn on/off control
- Easy installation with no tools required

Electrical Specifications

606800
- Minimum opening/operating voltage: 19 VAC
- Maximum recommended voltage: 28 VAC
- Current at 24 VAC:
  - 370 mA inrush, 210 mA holding, 50 Hz
  - 370 mA inrush, 210 mA holding, 60 Hz
- Maximum operating pressure: 230 PSI
- Wire leads: 18" of 18 AWG UL-approved wire

458200
- Minimum opening/operating voltage: 6 VDC
- Maximum recommended voltage: 9 VDC
- Coil resistance: 4.8 ohms nominal
- Maximum operating pressure: 200 PSI
- Wire leads: 18" of 18 AWG black and red UL-approved wire

AC Solenoid
Height: 2¼"
Width: 1"
Depth: 1"

DC-Latching Solenoid
Height: 2¼"
Width: 1"
Depth: 1"

[pdf] User Manual Specifications Accessories

Solenoids SOLENOIDS Apr 16 2023 — Pre wired with 18 of valve control wire Use for replacement or retrofits 458200 DC latching solenoid all Hunter irrigation valves 606800 Product Overview srsltid AfmBOopL6JACIbCJJZ3d b9xp 2g 0GjafDUzX3Bv5 FRMjj6QTcfMmr supplyhouse product files ||| ACCESSORIES Built on Innovation SOLENOIDS Heavy-duty Hunter 24 VAC or latching solenoids provides ... l quarter-turn on/off control Easy installation with no tools required Electrical Specifications **606800** Minimum opening/operating voltage: 19 VAC Maximum recommended voltage: 28 VAC Current at 2...

lang:en score:25 filesize: 125.91 K page_count: 2 document date: 2023-04-16

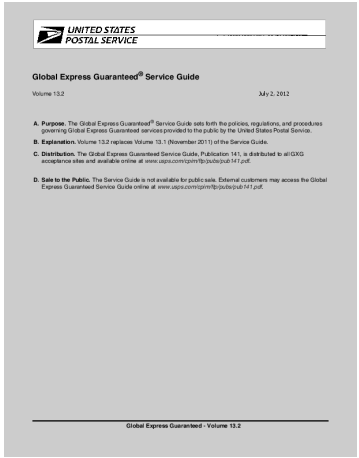

UNITED STATES POSTAL SERVICE

Global Express Guaranteed® Service Guide

Volume 13.2 July 2, 2012

A. Purpose. The Global Express Guaranteed® Service Guide sets forth the policies, regulations, and procedures governing Global Express Guaranteed services provided to the public by the United States Postal Service.

B. Explanation. Volume 13.2 replaces Volume 13.1 (November 2011) of the Service Guide.

C. Distribution. The Global Express Guaranteed Service Guide, Publication 141, is distributed to all GXG acceptance sites and available online at *www.usps.com/cpim/ftp/pubs/pub141.pdf*.

D. Sale to the Public. The Service Guide is not available for public sale. External customers may access the Global Express Guaranteed Service Guide online at *www.usps.com/cpim/ftp/pubs/pub141.pdf*.

Global Express Guaranteed - Volume 13.2

[Global Express Guaranteed Service Guide - International Shipping Policies]

Comprehensive guide detailing policies, regulations, and procedures for Global Express Guaranteed (GXG) international expedited delivery services offered by the United States Postal Service in partnership with FedEx Express. Covers shipping requirements, prohibited items, insurance, and form instructions.

lang:en score:24 filesize: 19.87 M page_count: 1159 document date: 2012-06-12

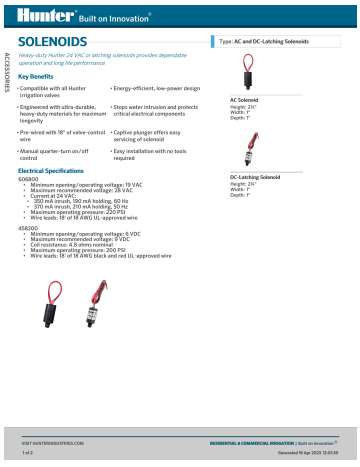

Hunter Built on Innovation

SOLENOIDS

Type: AC and DC-Latching Solenoids

Heavy-duty Hunter 24 VAC or latching solenoids provides dependable operation and long life performance.

Key Benefits

- Compatible with all Hunter irrigation valves
- Energy-efficient, low-power design
- Engineered with ultra-durable, heavy-duty materials for maximum longevity
- Stops water intrusion and protects critical electrical components
- Pre-wired with 18" of valve-control wire
- Captive plunger offers easy servicing of solenoid
- Manual quarter-turn on/off control
- Easy installation with no tools required

Electrical Specifications

606800
- Minimum opening/operating voltage: 19 VAC
- Maximum recommended voltage: 28 VAC
- Current at 24 VAC:
  - 370 mA inrush, 210 mA holding, 50 Hz
  - 370 mA inrush, 210 mA holding, 60 Hz
- Maximum operating pressure: 230 PSI
- Wire leads: 18" of 18 AWG UL-approved wire

458200
- Minimum opening/operating voltage: 6 VDC
- Maximum recommended voltage: 9 VDC
- Coil resistance: 4.8 ohms nominal
- Maximum operating pressure: 200 PSI
- Wire leads: 18" of 18 AWG black and red UL-approved wire

AC Solenoid
Height: 2¼"
Width: 1"
Depth: 1"

DC-Latching Solenoid
Height: 2¼"
Width: 1"
Depth: 1"

[pdf] User Manual Specifications Accessories

Solenoids SOLENOIDS SupplyHouseUse for replacement or retrofits 458200 DC latching solenoid all Hunter irrigation valves User Installed Options Modelv1supplyhouse product files 606800 Product Overview srsltid AfmBOopWmp9g KDq5vlZyLYwEAA9ThgG34L1kLbQAGUwUPySFTRl9oDj SupplyHouseSOLENOIDS ModelHeavy duty 24 VAC solenoids provides dependable operation and long life performance Key Benefits Electrical v1v1supplyhouse KDq5vlZyLYwEAA9ThgG34L1kLbQAGUwUPySFTRl9oDjsupplyhouse AfmBOopBw rYbKb9sDAjrPM4e8f7k3 9Do8wjCPp83W2qtyDGmFdw6kX Electrical NODE 400 4 station controller ordered separately NODE 600 6 ordered v1v1v1supplyhouse 9Do8wjCPp83W2qtyDGmFdw6kXsupplyhouse AfmBOopdJV hLYP7phKpVLKIpU3lWI cDjREZb5w3pGzPqk76pYQPzz7 ordered v1v1v1v1supplyhouse cDjREZb5w3pGzPqk76pYQPzz7supplyhouse AfmBOoruCmPqreIA44JFn6smUu BZaAApu6dqb4g TH0CIgANyIzVESO ||| ||| ACCESSORIES Built on Innovation SOLENOIDS Heavy-duty Hunter 24 VAC or latching solenoids provides dependable operation and long life performance. Key Benefits Compatible with all Hunter irrigation valves Energy-efficient, low-power design E ||| ACCESSORIES Built on Innovation SOLENOIDS Heavy-duty Hunter 24 VAC or latching solenoids provides dependable operation and long life performance. Key Benefits Compatible with all Hunter irrigation valves Energy-efficient, low-power design E ||| ACCESSORIES Built on Innovation SOLENOIDS Heavy-duty Hunter 24 VAC or latching solenoids provides dependable operation and long life performance. Key Benefits Compatible with all Hunter irrigation valves Energy-efficient, low-power design E

ACCESSORIES Built on Innovation SOLENOIDS Heavy-duty Hunter 24 VAC or latching solenoids provides ... l quarter-turn on/off control Easy installation with no tools required Electrical Specifications **606800** Minimum opening/operating voltage: 19 VAC Maximum recommended voltage: 28 VAC Current at 2...

lang:en score:23 filesize: 125.91 K page_count: 2 document date: 2023-04-16

[pdf] User Manual

PGV VALVES Hunter Industries External and internal manual bleed allows quick easy at the valve activation 1 25 mm plastic globe with flow control Double beaded diaphragm seal design for superior leak free performance Optional DC latching solenoids enable s battery powered controllers P N 458200 BR em hunterindustries sites default files

RESIDENTIAL COMMERCIAL IRRIGATION Built on Innovation 01 Hardworking: Built to last in the elemen ... irrigation products Encapsulated 24 VAC solenoid with captive plunger for hassle-free service P/N **606800** Temperature rating: 66C Warranty period: 2 years Operating Specifications Flow rate: - PG...

lang:en score:22 filesize: 306.48 K page_count: 2 document date: 2021-05-05

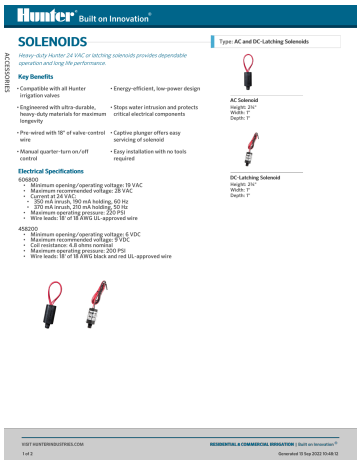

[pdf] User Manual Specifications Accessories

Solenoids hunter industries solenoids 2021 09 14 Hunter Coils Rovic Leers content storefront7 co za stores rovic products documents |||

ACCESSORIES Built on Innovation SOLENOIDS Heavy-duty Hunter 24 VAC or latching solenoids provides ... l quarter-turn on/off control Easy installation with no tools required Electrical Specifications **606800** Minimum opening/operating voltage: 19 VAC Maximum recommended voltage: 28 VAC Current at 2...

lang:en score:21 filesize: 125.91 K page_count: 2 document date: 2022-09-13

[pdf] Accessories Label

valve Parts PrICellst Hunter Industries Bonnet O ring Screw Kit 22 0113 Supa Stik Labels ReplacementPartsPriceList valves dom hunterindustries sites default files |||

valve Parts PRICELIST ROTORS SPRAYS VALVES CONTROLLERS SENSORS CENTRAL CONTROLS ACCESSORIES 10 EFF ... port Ring 10 Body NPT Thread BSP Thread Slip 11 Flow Control Handle Black Purple Catalog No. **606800** 458200 262600 364400 331700 331100 379400 266000 332100 331300 331005 331010 331015 269200 26...

lang:nl score:20 filesize: 4.29 M page_count: 29 document date: 2010-05-04

[pdf] Parts List Specifications

General Hunter Parts List Industries ReplacementPartsList hunterindustries sites default files 2024 05 |||

Replacement Parts List RESIDENTIAL COMMERCIAL IRRIGATION Built on Innovation EFFECTIVE NOVEMBER ... aphragm Spring Diaphragm Assembly Diaphragm Support Ring Flow Control Handle, Black CATALOG NO. **606800** 458200 262600 364400 427300 556100 556000 266000SP 332100SP 331300SP 269200 VALVES 1 4 2 3 5...

lang:no score:20 filesize: 45.16 M page_count: 110 document date: 2022-10-26

[pdf] Accessories

valve Parts PrICellst Hunter IndustriesS16500 1 $3 72 S16500 Barbed L Fitting Bonnet S16527 $4 56 T Tubing EP Valvesv1hunterirrigation sites default files ReplacementPartsPriceList valves dom |||

valve Parts PRICELIST ROTORS SPRAYS VALVES CONTROLLERS SENSORS CENTRAL CONTROLS ACCESSORIES 10 EFF ... port Ring 10 Body NPT Thread BSP Thread Slip 11 Flow Control Handle Black Purple Catalog No. **606800** 458200 262600 364400 331700 331100 379400 266000 332100 331300 331005 331010 331015 269200 26...

lang:nl score:20 filesize: 4.29 M page_count: 29 document date: 2010-05-04

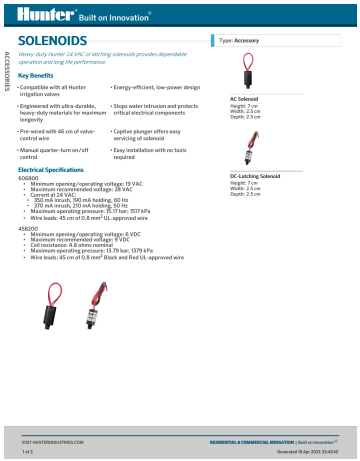

[pdf] User Manual Specifications Accessories

Solenoids SOLENOIDS hunter industries solenoids 2021 09 08 cdck file global s3 dualstack us west 2 amazonaws standard14 core electronics original 2X 1 14f9576edac79052cf1bacefc0328da1664a387a |||

ACCESSORIES Built on Innovation SOLENOIDS Heavy-duty Hunter 24 VAC or latching solenoids provides ... l quarter-turn on/off control Easy installation with no tools required Electrical Specifications **606800** Minimum opening/operating voltage: 19 VAC Maximum recommended voltage: 28 VAC Current at 2...

lang:en score:20 filesize: 125.74 K page_count: 2 document date: 2023-04-19

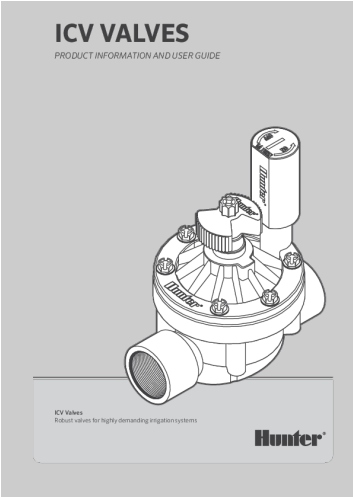

[pdf] Troubleshooting Guide Parts List Guide

hunter icv valve ICV Hunter Industries VALVES rc 154 reva pg em web hunterindustries sites default files |||

ICV VALVES PRODUCT INFORMATION AND USER GUIDE ICV Valves Robust valves for highly demanding irrigati ... t Ring 14 Filter Sentry Tag, Yellow 10-Pack 15 Purple Reclaimed ID Tag 10-Pack CATALOG NO. **606800** 458200 262600 364400 561400 386900 561200SP 561205SP 387200 387700 387900 560900 386000 38710...

lang:en score:19 filesize: 6.27 M page_count: 20 document date: 2021-01-13

[pdf] Parts List Catalog

Hunter Parts Catalog 433400 PGV 100G 101G Body Male x NPT EvergreenSprinklers ReplacementPartsPriceList dom evergreensprinklers documents |||

Replacement Parts List 2015-2016 Effective March 2015 RESIDENTIAL COMMERCIAL IRRIGATION Built on ... Support Ring Body 11 NPT Thread BSP Thread Slip Flow Control Handle Black Purple Catalog No. **606800** 458200 262600 364400 427300 556100 556000 266000 332100 331300 457700 457705 457710 269200 26...

lang:no score:19 filesize: 12.66 M page_count: 89 document date: 2015-01-09

[pdf] User Manual

X2™ Built on Innovation Hunter Industries il y a 2 jours — Módulo Wi Fi e Bluetooth opcional Altura cm remoto manual quando o não FI para software de gestão irrigação hunter industries x2tm 2021 11 30 hunterindustries print 96531 |||

Built on Innovation CONTROLLERS X2TM Este controlador com recursos online oferece definio rpida de ... setores, transformador interno de 230 VCA com plugue australiano User-Installed Options Model WAND **606800** ROAM-KIT ROAMXL-KIT Description Mdulo Bluetooth e Wi-FI para o software de gesto de irrigao ...

lang:es score:19 filesize: 162.36 K page_count: 2 document date: 2022-05-08

[pdf]

КЛАПАНЫ PGV Русский Hunter Industries br pgv ru hunterindustries sites default files |||

Built on Innovation 01 : 02 : , 03 : Hunter PGV ... : Hunter . 458200 Hunter -24 . **606800** : 66 C : 2 : - PGV-100: 0,059 3/, 0,7150 / - PGV-101: 0,059 3/, 0,7150 / - PGV-151: 5...

lang:de score:19 filesize: 235.53 K page_count: 2 document date: 2021-10-15

[pdf]

PGV Hunter Industries br pgv cn hunterindustries sites default files |||

Built on Innovation 01 02 03 Hunter PGV PGV 25 mm PGV 40 mm 50 mm / PGV Jar-Top Accu SyncTM Accu Sync Hunter hunterindustries.com PGV PGV-100 PGV-101151201 / 1 25 mm 1 40 mm 2 50 mm Hunter P/N 458200 Hunter 24 VAC P/N 606...

lang:de score:19 filesize: 452.85 K page_count: 2 document date: 2021-10-18

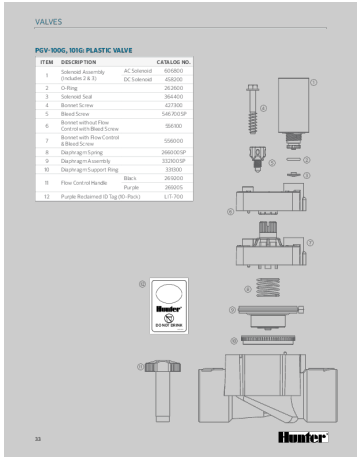

[pdf] Catalog

VALVES Hunter Industries 33 ITEM DESCRIPTION CATALOG NO 1 Solenoid Assembly Includes 2 3 AC 606800 DC 458200 O Ring 262600 Seal 364400 4 Bonnet Screw 427300 replacementpartslist pgv 100g 101g hunterindustries sites default files

VALVES PGV-100G, 101G: PLASTIC VALVE ITEM 1 2 3 4 5 6 7 8 9 10 11 12 DESCRIPTION CATALOG NO. Solenoid Assembly Includes 2 3 AC Solenoid DC Solenoid **606800** 458200 O-Ring 262600 Solenoid Seal 364400 Bonnet Screw 427300 Bleed Screw 546700SP Bonnet without Flow Control with Bleed Scr...

lang:id score:18 filesize: 344.41 K page_count: 1 document date: 2020-04-20

[pdf]

Hunter PGV Valves Information irribiz au Documents Info and Spec Sheet |||

RESIDENTIAL COMMERCIAL IRRIGATION Built on Innovation 01 Hardworking: Built to last in the elemen ... irrigation products Encapsulated 24 VAC solenoid with captive plunger for hassle-free service P/N **606800** Temperature rating: 66C Warranty period: 2 years Operating Specifications Flow rate: - PG...

lang:en score:18 filesize: 306.09 K page_count: 2 document date: 2022-07-25

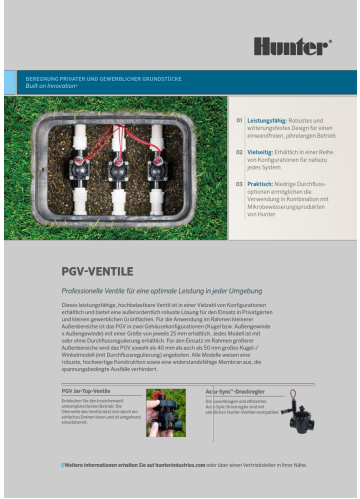

[pdf]

Deutsch PGV Hunter Industries br pgv de hunterindustries sites default files |||

BEREGNUNG PRIVATER UND GEWERBLICHER GRUNDSTCKE Built on Innovation 01 Leistungsfhig: Robustes und w ... Gekapselte 24-VAC-Magnetspule mit unverlierbarem Plunger sorgt fr einen problemlosen Betrieb P/N **606800** Temperaturzulassung: 66 C Gewhrleistungszeitraum: 2 Jahre Betriebsdaten Flowrate: - PGV-1...

lang:de score:18 filesize: 206.75 K page_count: 2 document date: 2021-10-20

[pdf]

Türkçe PGV Hunter Industries br pgv tr hunterindustries sites default files |||

BREYSEL VE TCAR SULAMA Built on Innovation 01 alikan: Dayanikli bileenler kullanilarak yillarca kus ... nleriyle kullanima olanak tanir Sorunsuz hizmet iin pistonu kapsl iine alinmi 24 VAC solenoid P/N **606800** Sicaklik deeri: 66C Garanti sresi: 2 yil alima Teknik zellikleri Debi: - PGV-100: 0,05 il...

lang:id score:18 filesize: 227.82 K page_count: 2 document date: 2021-10-19

[pdf]

Magyar PGV Hunter Industries br pgv hu hunterindustries sites default files |||

OTTHONI S IPARI NTZS Built on Innovation 01 J munkabrs: gy van kialaktva, hogy az elemei tartsak le ... behzmgnes magja kiess ellen biztostott, a szelepeket problmamentesen lehet karbantartani cikksz.: **606800** . Krnyezeti hmrsklet: akr 66C Garancilis id: a gyrtstl szmtott 2 v Mkdsi adatai tfoly vzme...

lang:no score:18 filesize: 210.32 K page_count: 2 document date: 2021-10-14

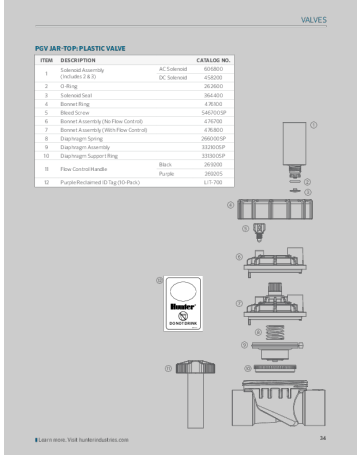

[pdf] Catalog

PGV JAR TOP PLASTIC VALVE Hunter Industries 34 4 DO NOT DRINK T L 700 I VALVES ITEM DESCRIPTION CATALOG NO 1 Solenoid Assembly Includes 2 3 AC 606800 DC 458200

replacementpartslist pgv jar top hunterindustries sites default files

PGV JAR-TOP: PLASTIC VALVE ITEM 1 2 3 4 5 6 7 8 9 10 DESCRIPTION Solenoid Assembly Includes 2 3 ... rol Handle 12 Purple Reclaimed ID Tag 10-Pack AC Solenoid DC Solenoid Black Purple CATALOG NO. **606800** 458200 262600 364400 476100 546700SP 476700 476800 266000SP 332100SP 331300S4P 269200 269205 ...

lang:de score:18 filesize: 133.25 K page_count: 1 document date: 2020-04-20

[pdf]

Polski PGV Hunter Industries br pgv pl hunterindustries sites default files |||

PRZYDOMOWE I KOMERCYJNE SYSTEMY NAWADNIAJCE Built on Innovation 01 Wytrzymalo: zbudowane z myl o wi ... a Cewka 24 V w obudowie hermetycznej z ukladem bezpieczestwa zapewnia bezproblemow obslug nr czci **606800** Temperatura znamionowa: 66C Okres gwarancyjny: 2 lata Dane uytkowe Przeplyw: - PGV-100: o...

lang:pl score:18 filesize: 226.24 K page_count: 2 document date: 2021-10-18

[pdf] User Manual

Português PGV Hunter Industries br pgv pt hunterindustries sites default files |||

IRRIGAO RESIDENCIAL E COMERCIAL Built on Innovation 01 Resistente: construda para aguentar as intem ... irrigao da Hunter Solenoide encapsulada de 24 VCA com mbolo preso para manuteno descomplicada P/N **606800** Temperatura nominal: 66 C Perodo de garantia: 2 anos especificaes de operao Taxa de vazo:... lang:pt score:18 filesize: 207.61 K page_count: 2 document date: 2021-10-20

[pdf] User Manual Specifications

View prieš 10 valandų — Compatible with all Hunter irrigation valves Energy efficient low power design Engineered ultra durable heavy duty materials for maximum longevity Solenoids hunterirrigation print node 171006 |||

Solenoids Heavy-duty Hunter 24 VAC or latching solenoids provides dependable operation and long life ... nual quarter-turn on/off control Easy installation with no tools required ELECTRICAL SPECIFICATIONS **606800** Minimum opening/operating voltage: 19 VAC Maximum recommended voltage: 28 VAC Current at 2... lang:en score:18 filesize: 125.76 K page_count: 1 document date: 2025-01-28

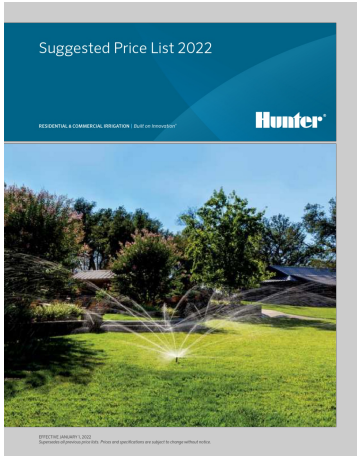

[pdf] User Manual Specifications Price List

Suggested Price List 2022 Hunter Industries Pro Spray PRS30 SPRINKLER BODIES PRS40 Start Times Run Water Days Solar Sync® Manual Seasonal Adjust Domestic ResCom hunterindustries sites default files |||

Suggested Price List 2022 RESIDENTIAL COMMERCIAL IRRIGATION Built on Innovation EFFECTIVE JANUAR ... MODEL LIST PRICE DESCRIPTION 458200 40.00 DC-Latching Solenoid for all Hunter plastic valves **606800** 15.95 AC solenoid for all Hunter valves 464322 31.00 Solenoid conduit covers 515005 2.00... lang:de score:18 filesize: 7.48 M page_count: 64 document date: 2021-12-02

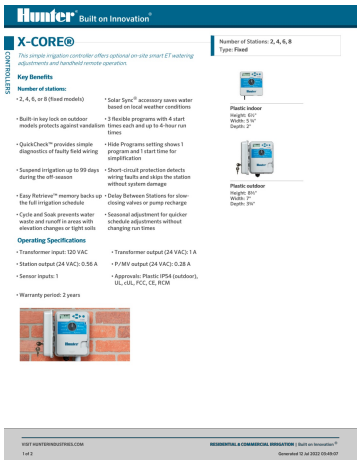

Hunter Built on Innovation

CONTROLLERS

X-CORE®

This simple irrigation controller offers optional on-site smart ET watering adjustments and handheld remote operation

Number of Stations: 2, 4, 6, 8
Type: Fixed

Key Benefits

Number of stations:

- 2, 4, 6, or 8 (fixed models)
- Built-in key lock on outdoor models protects against vandalism
- QuickCheck™ provides simple diagnostics of faulty field wiring
- Suspend irrigation up to 99 days during the off-season
- Easy Retrieve™ memory backs up the full irrigation schedule
- Cycle and Soak prevents water waste and runoff in areas with elevation changes or tight soils
- Solar Sync® accessory saves water based on local weather conditions
- 3 flexible programs with 4 start times each and up to 4-hour run times
- Hide Programs setting shows 1 program and 1 start time for simplification
- Short-circuit protection detects wiring faults and skips the station without system damage
- Delay Between Stations for slow-closing valves or pump recharge
- Seasonal adjustment for quicker schedule adjustments without changing run times

Plastic indoor
Height: 8½"
Width: 5 ⅝"
Depth: 2"

Plastic outdoor
Height: 8½"
Width: 7"
Depth: 3¼"

Operating Specifications

- Transformer input: 120 VAC
- Station output (24 VAC): 0.56 A
- Sensor inputs: 1
- Transformer output (24 VAC): 1 A
- P/NV output (24 VAC): 0.28 A
- Approvals: Plastic IP54 (outdoor), UL, cUL, FCC, CE, RCM
- Warranty period: 2 years

VISIT HUNTERINDUSTRIES.COM
1 of 2
RESIDENTIAL & COMMERCIAL IRRIGATION | Built on Innovation™
Generated 12 Jul 2022 03:49:07

[pdf] Specifications Accessories

X Core® Hunter Industries C O N T R L E S Options Models Model Description 606800 AC solenoid ROAM KIT Remote with up to 1 000 ft range Includes transmitter receiver SmartPort® wiring harness and 4 AAA batteries hunter industries x corer 2022 01 20 hunterindustries print 237 |||

CONTROLLERS Built on Innovation X-CORE This simple irrigation controller offers optional on-site s ... RIGATION Built on Innovation Generated 12 Jul 2022 03:49:07 CONTROLLERS Options Models: Model **606800** ROAM-KIT ROAMXL-KIT Compatible Sensors SOLAR-SYNC-SEN WSS-SEN RAIN-CLIK RFC WR-CLIK MINI-CLIK...

lang:en score:18 filesize: 204.96 K page_count: 2 document date: 2022-07-12

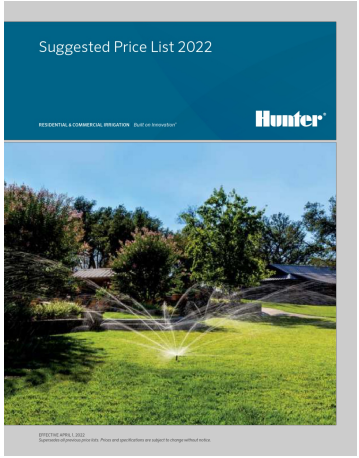

Suggested Price List 2022

RESIDENTIAL & COMMERCIAL IRRIGATION Built on Innovation™

Hunter

EFFECTIVE APRIL 1, 2022
Supersedes all previous price lists. Prices and specifications are subject to change without notice.

[pdf] User Manual Specifications Price List

Suggested Price List 2022 Hunter Industries PS Ultra Sprinkler Bodies with Preinstalled Nozzles 21 Start Times Run Water Days Solar Sync® Manual Seasonal Adjust Domestic PriceList ResCom hunterindustries sites default files |||

Suggested Price List 2022 RESIDENTIAL COMMERCIAL IRRIGATION Built on Innovation EFFECTIVE APRIL ... MODEL LIST PRICE DESCRIPTION 458200 41.25 DC-Latching Solenoid for all Hunter plastic valves **606800** 16.45 AC solenoid for all Hunter valves 464322 32.50 Solenoid conduit covers 515005 2.00...

lang:de score:18 filesize: 7.56 M page_count: 64 document date: 2022-03-25

ACCU SYNC® PRESSURE REGULATOR

These robust solutions provide a simple way to achieve unparalleled pressure regulation for optimal performance.

OPERATING SPECIFICATIONS

- Regulation from 20 to 100 PSI
- Shut pressure: 150 PSI
- Required dynamic pressure differential: 15 PSI
- Works with AC and DC-Latching Solenoids
- Works with any Hunter valve
- Warranty period: 2 years

ACCU SYNC VALVE RECOMMENDED FLOW RANGE

Valve	Flow
PGV-100/101	15 to 40
PGV-151	20 to 120
PGV-201	40 to 150
ICV-101	15 to 40
ICV-151	20 to 150
ICV-201	40 to 200
ICV-301	150 to 300
IBV-101	15 to 40
IBV-151	20 to 150
IBV-201	40 to 200
IBV-301	150 to 300

ACCU SYNC APPLICATIONS

- Adjustable 20–100 PSI: For full customization, the adjustable Accu-Sync can regulate pressure from 20 to 100 PSI

ADJUSTABLE

ACCUSYNC-ADJ PRESSURE REGULATOR
Height x Width x Depth: 3½"

ADAPTER

SOLENOID ADAPTER

AC Solenoid
P/N 606800: Includes one red common and one red station wire

ACCU SYNC PRESSURE REGULATOR – SPECIFICATION BUILDER: ORDER 1 + 2

1 Model	2 Inlet/Outlet
ACCU SYNC	ADJ – Adjustable Pressure Regulator (20-100 PSI)

Example:
ICV-201-D-AS-ADJ = 2" ICV globe valve with Hydraulic, user installable Accu-Sync Pressure Regulator

VALVES

Hunter hunterindustries.com 81

[pdf] Specifications Warranty

Accu Sync® Hunter Industries CA Cutsheet Sync 2024 US hunterirrigation sites default files 08 |||

VALVES ACCU SYNC PRESSURE REGULATOR These robust solutions provide a simple way to achieve unparall ... lobe valve with ow control, user-installed adjustable Accu Sync Pressure Regulator AC Solenoid P/N **606800**: Includes one red common and one red station wire 81 hunterindustries.com ...

lang:en score:17 filesize: 84.46 K page_count: 1 document date: 2024-08-29

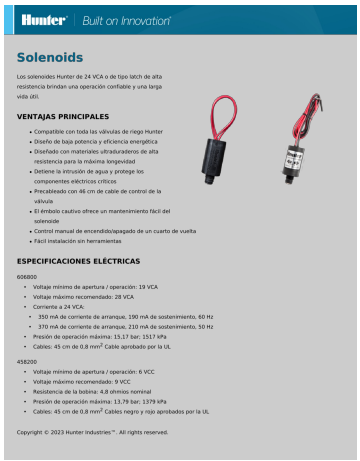

Hunter Built on Innovation

Solenoids

Los solenoides Hunter de 24 VCA o de tipo latch de alta resistencia brindan una operación confiable y una larga vida útil.

VENTAJAS PRINCIPALES

- Compatible con toda las válvulas de riego Hunter
- Diseño de baja potencia y eficiencia energética
- Diseñado con materiales ultradureros de alta resistencia para la máxima longevidad
- Detiene la intrusión de agua y protege los componentes eléctricos críticos
- Precableado con 46 cm de cable de control de la válvula
- El émbolo cautivo ofrece un mantenimiento fácil del solenoide
- Control manual de encendido/apagado de un cuarto de vuelta
- Fácil instalación sin herramientas

ESPECIFICACIONES ELÉCTRICAS

606800

- Voltaje mínimo de apertura / operación: 19 VCA
- Voltaje máximo recomendado: 28 VCA
- Corriente a 24 VCA:
  - 350 mA de corriente de arranque, 190 mA de sostenimiento, 60 Hz
  - 370 mA de corriente de arranque, 210 mA de sostenimiento, 50 Hz
- Presión de operación máxima: 15,17 bar; 1517 kPa
- Cables: 45 cm de 0,8 mm² Cable aprobado por la UL

458200

- Voltaje mínimo de apertura / operación: 6 VCC
- Voltaje máximo recomendado: 9 VCC
- Resistencia de la bobina: 4,8 ohmios nominal
- Presión de operación máxima: 13,79 bar; 1379 kPa
- Cables: 45 cm de 0,8 mm² Cables negro y rojo aprobados por la UL

Copyright © 2023 Hunter Industries™. All rights reserved.

[pdf] User Manual

View 30 août 2023 — Compatible con toda las válvulas de riego Hunter Diseño baja potencia y eficiencia energética Diseñado materiales ultraduraderos alta Solenoids hunterindustries es print node 171006 |||

Solenoids Los solenoides Hunter de 24 VCA o de tipo latch de alta resistencia brindan una operacin c ... ncendido/apagado de un cuarto de vuelta Fcil instalacin sin herramientas ESPECIFICACIONES ELCTRICAS **606800** Voltaje mnimo de apertura / operacin: 19 VCA Voltaje mximo recomendado: 28 VCA Corriente a...

lang:es score:17 filesize: 122.96 K page_count: 2 document date: 2023-09-08

Hunter

Built on Innovation

01 02 03

PGV محابس

PGV Jar-Top

Acco Sync

[pdf] Borchure

محابس PGV Hunter Industries 2021 12 29 — توفّر هذه المحابس شديدة التحمل والمتاحة في مجموعة من التكوينات متانة قصوى للتعامل مع الظروف القاسية للمواقع السكنية والتجارية الخفيفة br pgv ar hunterindustries sites default files Brochure |||

: 01 : 02 : 03 Hunter Built on Innovation PGV ... : Hunter 458200 Hunter 24 **606800** 66 : : : / 150 0.7 /3 9 0.05 :PGV-100/ 150 0.7 /3 9 0.05 :PGV-101- / 450 ...

lang:de score:17 filesize: 393.45 K page_count: 2 document date: 2021-08-04

PGV Y PGV DE 1" DE TAPA ROSCADA

Estas versátiles y robustas válvulas permiten un mantenimiento sencillo.

VENTAJAS PRINCIPALES

- El pasador manual externo/interno permite una apertura rápida y sencilla de la válvula
- El diafragma doble reforzado de la junta de membrana garantiza un funcionamiento sin fugas
- Los tornillos cautivos de la tapa eliminan la posibilidad de perder piezas durante el mantenimiento
- Los tornillos de la tapa se pueden manejar con los herramientas destornillador de punta plana o de estrella y llave de vaso
- Los resaltes con tapa roscada proporcionan un acceso fácil y sin herramientas
- El solenoide encapsulado con núcleo cautivo que se utiliza en las válvulas Hunter facilita un mantenimiento sin complicaciones
- El control del caudal maximiza la eficiencia y protege la vida útil del sistema

OPCIONES INSTALADAS POR EL USUARIO

- Regulador de presión Acco Sync™ de Hydrolink®
- Solenoide Latch CC por programadores alimentados por pilas (Ref. 458200)

OPCIONES INSTALADAS DE FÁBRICA

- LS: Válvula en solenoide
- DC: Solenoide Latch CC para programadores alimentados por pilas **consulte la página 280**
- JT: resaltes de tapa roscada

ESPECIFICACIONES DE FUNCIONAMIENTO

- Caudal: de 0,05 a 9 m³/h de 0,7 a 150 l/min
- Intervalo de presión recomendado: de 1,5 a 10 bares, 150 a 1000 kPa
- Temperatura normal: 66 °C
- Periodo de garantía: 2 años

ESPECIFICACIONES DEL SOLENOIDE

- Solenoide de 24 V CA
  - 350 mA arranque, 190 mA mantenidos, 60 Hz
  - 370 mA arranque, 210 mA mantenidos, 50 Hz
- Información del producto Acco-Sync

VÁLVULAS

Diagrama con doble reborde

Solenoide CA (Ref. 606800) Dos cables rojos

Solenoide CC tipo "latch" (Ref. 458200) El solenoide tiene un cable negro y un cable rojo (de colores)

Hunter

[pdf] User Manual

Ficha Tecnica Electroválvula Hunter tapa roscada PGV Jar Top Piscina y Spa electrovalvula hunter pgv jar top piscinayspa ficheros |||

VLVULAS PGV Y PGV DE 1 DE TAPA ROSCADA Estas verstiles y robustas vlvulas permiten un mantenimient ... JT-G Dimetro de entrada: 1 25 mm Altura: 14 cm Longitud: 11 cm Anchura: 8 cm Solenoide CA Ref. **606800** Dos cables rojos Solenoide CC tipo latch Ref. 458200 El solenoide tiene un cable negro ...

lang:es score:17 filesize: 284.49 K page_count: 2 document date: 2021-11-15

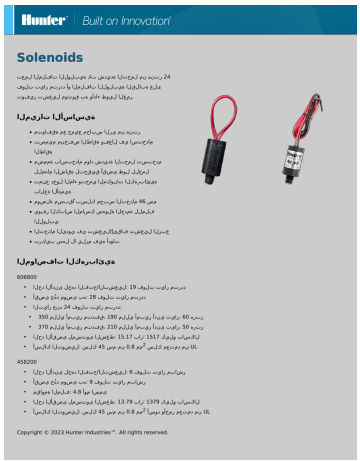

[pdf] Accessories

View ØªÙÙÙØ± ØªØ´Ø´Øº ÙÙ ÙÙ Ø«ÙÙ Ø¯Ù ÙØ£ Ø¯Ø§Ø¡ Ø·Ù Ù Ù Ø§ Ø¹ Ù Ø± Hunter Industries hunterindustries âº node Solenoids ar print 171006 |||

Solenoids 24 . 46 / **606800** /: 19 : 28 24 : 350 190 60 370 210 50 : 15.17 1517 : 45 0.8 2 UL 458200 /: 6 : 9 : 4.8 : 13.79 1379 : 45 0....

lang:es score:17 filesize: 124.08 K page_count: 2 document date: 2023-11-17

[pdf] Accessories

View 31 août 2023 — Hunter 46 Solenoids hunterindustries cn print node 171006 |||

Solenoids Hunter 24 VAC Hunter 46 1/4/ **606800** /19 VAC 28 VAC 24 VAC 350 mA 190 mA 60 Hz 370 mA 210 mA 50 Hz 15.17 bar; 1517 kPa 45 cm 0.8 2mUmL 458200 /6 VDC 9 VDC 4.8 13.79 bar; 1379 kPa 45 cm 0.8 2mm UL Copyright 2023 Hunter IndustriesTM. All rights reserved. https:/...

lang:es score:16 filesize: 119.33 K page_count: 1 document date: 2023-09-08

[pdf] User Manual Specifications Warranty

Hunter PGV 25mm spec sheetHunter Series Jar Top 24vac 1 Solenoid ValveHunter sheetcdn shopify s files 0588 4569 2103 sheet v 1649224363 |||

VALVES 1 PGV AND PGV JAR-TOP These versatile and robust valves offer simple serviceability. KEY B ... eter: 1 25 mm Height: 14 cm Length: 11 cm Width: 8 cm Double-Beaded Diaphragm AC Solenoid P/N **606800** Two red wires DC-Latching Solenoid P/N 458200 One black common wire and one red statio...

lang:en score:16 filesize: 285.1 K page_count: 2 document date: 2022-04-06

PGV 1" I PGV JAR TOP

[pdf]

KARTA KATALOGOWA Elektrozawór PGV Hunter Zawór elektromagnetyczny PGV101GB 1 Nawodnienia eu Warszawa karta katpgv 100 101 nawodnienia files 1012344034 |||

ZAWORY PGV 1 I PGV JAR TOP Obsluga tych wszechstronnych i wytrzymalych elektrozaworw jest bardzo pr ... 14 cm Dlugo: 11 cm Szeroko: 8 cm Membrana podwjnie owijana 90 Elektrozawr prd zmienny nr czci **606800** Dwa czerwone przewody Cewka blokujca na prd staly nr czci 458200 Jeden czarny przewd wsp... lang:pl score:16 filesize: 334.74 K page_count: 2 document date: 2022-10-19

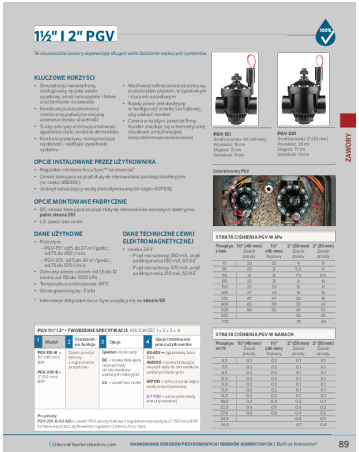

1½" I 2" PGV

[pdf]

Elektrozawory PGV Hunter Karty katalogowe Pobierz Nawodnienia eu Warszawa karta kat elektrozawory PGV nawodnienia files 1741809995 file |||

11/2 I 2 PGV Te niezawodne zawory zapewniaj dlugotrwale dzialanie wikszych systemw. ZAWORY KLUCZOW ... 14 cm Dlugo: 11 cm Szeroko: 8 cm Membrana podwjnie owijana 90 Elektrozawr prd zmienny nr czci **606800** Dwa czerwone przewody Cewka blokujca na prd staly nr czci 458200 Jeden czarny przewd wsp... lang:pl score:16 filesize: 416.4 K page_count: 3 document date: 2022-10-19

ICV

[pdf]

KARTA KATALOGOWA Elektrozawór ICV Hunter Zawór elektromagnetyczny 301GB 3 Nawodnienia eu Warszawa karta katelektrozawory icv nawodnienia files 1012344034 |||

ZAWORY ICV Ten zawr jest idealnym wyborem do systemw wysokocinieniowych i do brudnej wody. KLUCZOW ... 29 23 850 38 30 950 47 38 1,050 58 47 1,135 69 56 Elektrozawr prd zmienny nr czci **606800** Dwa czerwone przewody Cewka blokujca na prd staly nr czci 458200 Jeden czarny przewd wspl... lang:pl score:16 filesize: 349.46 K page_count: 2 document date: 2022-10-19

ICV

Ten zawór jest idealnym wyborem do systemów wysokociśnieniowych i do brudnej wody.

KLUCZOWE KORZYŚCI

- Opcjonalny mechanizm filtra Sentry™ czyści wkład filtracyjny w przypadku brudnej wody
- Zewnętrzny i wewnętrzny, obsługiwany ręcznie, umożliwia szybkie i łatwe urucharmianie
- Wzmocniony z wlotem o dużej średnicy zapewnia najwyższe wartości znamionowe ciśnienia i niezawodność
- Konstrukcja uszczelnienia z membraną podwójnie owijaną zapewnia lepszą szczelność
- Wzmacniana kauczukiem etylenowo-propylenowym membrana i gniazdo zapewniają wysoką wydajność w każdym środowisku wodnym
- Śruby pokrywy eliminują możliwość zgubienia części podczas demontażu
- Wszystkie odlewane ciśnieniowo korpusy z tworzywa sztucznego, bez ryzyka korozji
- Cewka w każdym zaworze firmy Hunter jest w obudowie hermetycznej, zapewniając bezpośrednią obsługę
- Kontrola przepływu maksymalizuje wydajność i wydłuża żywotność systemu

OPCJE INSTALOWANE PRZEZ UŻYTKOWNIKA

- Regulator ciśnienia Accu-Sync™ na zaworze*
- Cewka blokująca na prąd stały do sterowników zasilanych bateriami (nr części 458200)
- Filtr Sentry mozna łatwo dodać do zainstalowanego elektrozaworu

OPCJE MONTOWANA FABRYCZNIE

- LS: zawór bez cewki
- DC: cewka blokująca na prąd stały do sterowników zasilanych bateriami; (nr części 458200)
- FS: Filtr Sentry
- FS-R: Wlotgo do wody zwykle wyposażony z filtrem Sentry, lawendowym pokryciem obręcznym i lawendową membraną odporną na chlor

DANE UŻYTKOWE

- Przepływ:
  - ICV-101G: od 0,03 do 9 m³/godz.; od 0,4 do 150 l/min
  - ICV-151G: od 0,05 do 34 m³/godz.; od 0,6 do 568 l/min
  - ICV-201G: od 0,08 do 45 m³/godz.; od 1,4 do 757 l/min
  - ICV-301G: od 0,09 do 68 m³/godz.; od 1,6 do 1135 l/min
- Zakres ciśnienia roboczego: od 1,0 do 15,0 bara; od 150 do 1500 kPa
- Temperatura robocza: maksimum 60°C
- Obrót gwintowy: 5 lat

DANE TECHNICZNE CEWKI ELEKTROMAGNETYCZNEJ

- cewka 24 V
  - prąd rozruchowy 350 mA, prąd trzymania 190 mA , 60 HZ
  - prąd rozruchowy 370 mA, prąd trzymania 210 mA , 50 HZ
- Informacje dotyczące Accu-Sync znajdują się na **stronie 98**

ICV-101G
Średnica wlotu: 1" (25 mm)
Wysokość: 14 cm
Długość: 12 cm
Szerokość: 10 cm

ICV-151G
Średnica wlotu: 1½" (40 mm)
Wysokość: 18 cm
Długość: 15 cm
Szerokość: 14 cm

ICV-201G
Średnica wlotu: 2" (50 mm)
Wysokość: 18 cm
Długość: 17 cm
Szerokość: 14 cm

ICV-301G
Średnica wlotu: 3" (80 mm)
Wysokość: 27 cm
Długość: 21 cm
Szerokość: 16 cm

ICV-G
Średnica wlotu: 1" (25 mm), 1½" (40 mm), 2" (50 mm)
Wysokość: 18 cm
Długość: 17 cm
Szerokość: 14 cm

Membrana podwójnie owijana odporna na chlor

Mechanizm filtra Sentry

92 Hunter

©Odwiedź hunterindustries.com

[pdf]

KARTA KATALOGOWA Elektrozawór ICV Hunter Zawór elektromagnetyczny 201GB 2 Nawodnienia eu Warszawa karta katelektrozawory icv nawodnienia files 1012344034 |||

ZAWORY ICV Ten zawr jest idealnym wyborem do systemw wysokocinieniowych i do brudnej wody. KLUCZOW ... 29 23 850 38 30 950 47 38 1,050 58 47 1,135 69 56 Elektrozawr prd zmienny nr czci **606800** Dwa czerwone przewody Cewka blokujca na prd staly nr czci 458200 Jeden czarny przewd wspl...

lang:pl score:16 filesize: 625.64 K page_count: 2 document date: 2022-10-19

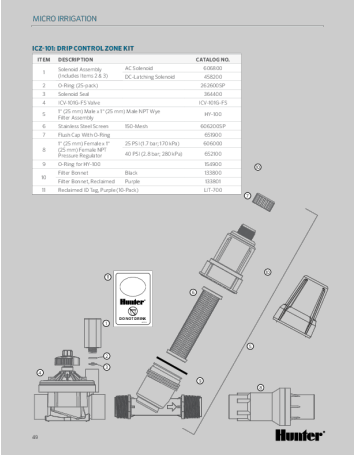

MICRO IRRIGATION

ICZ-101: DRIP CONTROL ZONE KIT

ITEM	DESCRIPTION		CATALOG NO.
1	Solenoid Assembly (Includes Items 2 & 3)	AC Solenoid	606800
		DC Latching Solenoid	458200
2	O-Ring (25-pack)		262600SP
3	Solenoid Seal		364400
4	ICV-101G-FS Valve		ICV-101G-FS
5	1" (25 mm) Male x 1" (25 mm) Male NPT Wye Filter Assembly		HY-100
6	Stainless Steel Screen	150-Mesh	606200SP
7	Flush Cap With O-Ring		651900
8	1" (25 mm) Female x 1" (25 mm) Female NPT Pressure Regulator	25 PSI (1.7 bar; 170 kPa)	606000
		40 PSI (2.8 bar; 280 kPa)	652900
9	O-Ring for HY-100		154900
10	Filter Bonnet	Black	133800
	Filter Bonnet, Reclaimed	Purple	133801
11	Reclaimed ID Tag, Purple (10-Pack)		LT-700

Hunter DO NOT DRINK

49 Hunter

[pdf] Parts List Catalog

Filters Filter Regulators Hunter Industries Drip Zone Kit Replacement Parts List hunterirrigation sites default files 2024 07 |||

MICRO IRRIGATION ICZ-101: DRIP CONTROL ZONE KIT ITEM 1 2 3 4 5 6 7 8 9 10 11 DESCRIPTION Solenoi ... ter Bonnet Black Filter Bonnet, Reclaimed Purple Reclaimed ID Tag, Purple 10-Pack CATALOG NO. **606800** 458200 262600SP 364400 ICV-101G-FS HY-100 606200SP 651900 606000 652100 154900 133800 133801 ...

lang:en score:15 filesize: 8.01 M page_count: 12 document date: 2024-07-25

Hunter Built on Innovation

Solenoids

الميزات الأساسية

المواصفات الكهربائية

606800

- لفات الملف ذات الجهد الكهربائي المنخفض 19 فولت تيار مستمر
- الحد الأدنى للجهد من 28 فولت تيار مستمر
- التيار الأدنى 24 فولت تيار مستمر
  - 350 ملليامبير تيار مستمر، 190 ملليامبير تيار متردد 60 هرتز
  - 370 ملليامبير تيار مستمر، 210 ملليامبير تيار متردد 50 هرتز
- الحد الأقصى للجهد المستمر المتغير: 15.17 فولت، 1517 ملليفولت
- استهلاك الطاقة المنخفض: أقل من 45 مم بمعدل 0.8 م³/ساعة

458200

- لفات الملف ذات الجهد الكهربائي المنخفض 6 فولت تيار مباشر
- الحد الأدنى للجهد من 9 فولت تيار مباشر
- متوسط التيار 4.8 أمبير (مدى)
- الحد الأقصى للجهد المستمر المتغير: 13.79 فولت، 1379 ملليفولت
- استهلاك الطاقة المنخفض: أقل من 45 مم بمعدل 0.8 م³/ساعة (مدى متوسط مدى ثابت)

Copyright © 2024 Hunter Industries Inc. Hunter, the Hunter logo, and other marks are trademarks of Hunter Industries Inc., registered in the U.S. and certain other countries.

https://redesign.hunterindustries.com/en/irrigation-product/accessories/solenoids
052024

[pdf] Accessories

View Solenoids redesign hunterindustries ar print node 171006 |||

Solenoids 24 . 46 / **606800** /: 19 : 28 24 : 350 190 60 370 210 50 : 15.17 1517 : 45 0.8 2 UL 458200 /: 6 : 9 : 4.8 : 13.79 1379 : 45 0....

lang:it score:15 filesize: 126.7 K page_count: 1 document date: 2024-05-20