Saved from manuals.plus.
Open the live page for links to other documents and user manuals.

Tecnolite CTL-1900/OP

Tecnolite CTL-1900/OP Pendant Lamp User Manual

Model: **CTL-1900/OP** | Brand: **Tecnolite**

1. Introduction

Thank you for choosing the Tecnolite CTL-1900/OP Pendant Lamp. This decorative luminaire is designed for indoor use, providing elegant and functional lighting. This manual provides essential information for the safe installation, operation, and maintenance of your new pendant lamp. Please read this manual thoroughly before installation and keep it for future reference.





Figure 1.1: Overview of the Tecnolite CTL-1900/OP Pendant Lamp with opal glass shade.

2. Safety Information

To ensure safe operation and prevent damage, please observe the following safety precautions:

- **WARNING:** Always turn off the main power supply at the circuit breaker before installing, servicing, or cleaning the fixture.
- This product is designed for **indoor use only**. Do not install in wet or damp locations.
- Installation should be performed by a qualified electrician in accordance with all local electrical codes.
- Ensure the mounting surface can support the weight of the fixture.
- Do not exceed the maximum wattage specified for the bulb type.
- Handle the opal glass shade with care to prevent breakage.
- Do not connect this fixture to an ungrounded electrical system.

3. Package Contents

Carefully unpack the box and ensure all components are present and undamaged. If any parts are missing or damaged, contact your retailer immediately.

- 1 x Tecnolite CTL-1900/OP Pendant Luminaire (includes canopy, cord, lamp holder, and opal glass shade)
- 1 x Instruction Manual

*Note: The light bulb is **NOT** included. A LED A19 bulb with an E27 base is suggested for optimal performance and energy efficiency.*

4. Installation Instructions

Follow these steps carefully for proper installation. Professional installation is recommended.

4.1. Preparation

1. **Turn off power:** Locate the main power switch or circuit breaker for the area where you are installing the lamp and turn it OFF. Verify that the power is off using a voltage tester.
2. **Unpack:** Carefully remove all components from the packaging.
3. **Inspect:** Check all parts for any signs of damage.

4.2. Mounting the Canopy

1. Attach the mounting bracket (if separate) to the junction box in the ceiling using the provided screws. Ensure it is securely fastened.
2. Feed the electrical wires from the junction box through the center hole of the lamp's canopy.

4.3. Wiring Connections

Make the electrical connections as follows, using wire nuts (not included) and ensuring secure connections:

- Connect the **green or bare copper ground wire** from the fixture to the **ground wire** from the junction box.
- Connect the **black (Live) wire** from the fixture to the **black (Live) wire** from the junction box.
- Connect the **white (Neutral) wire** from the fixture to the **white (Neutral) wire** from the junction box.

After making connections, carefully tuck all wires into the junction box.

4.4. Securing the Fixture and Installing the Bulb

1. Align the canopy with the mounting bracket and secure it using the canopy screws.
2. Carefully screw an E27 base LED A19 bulb (not included) into the lamp holder. Do not overtighten.
3. Attach the opal glass shade to the fixture according to its design. Typically, this involves screwing it onto the lamp holder assembly or securing it with retaining rings.

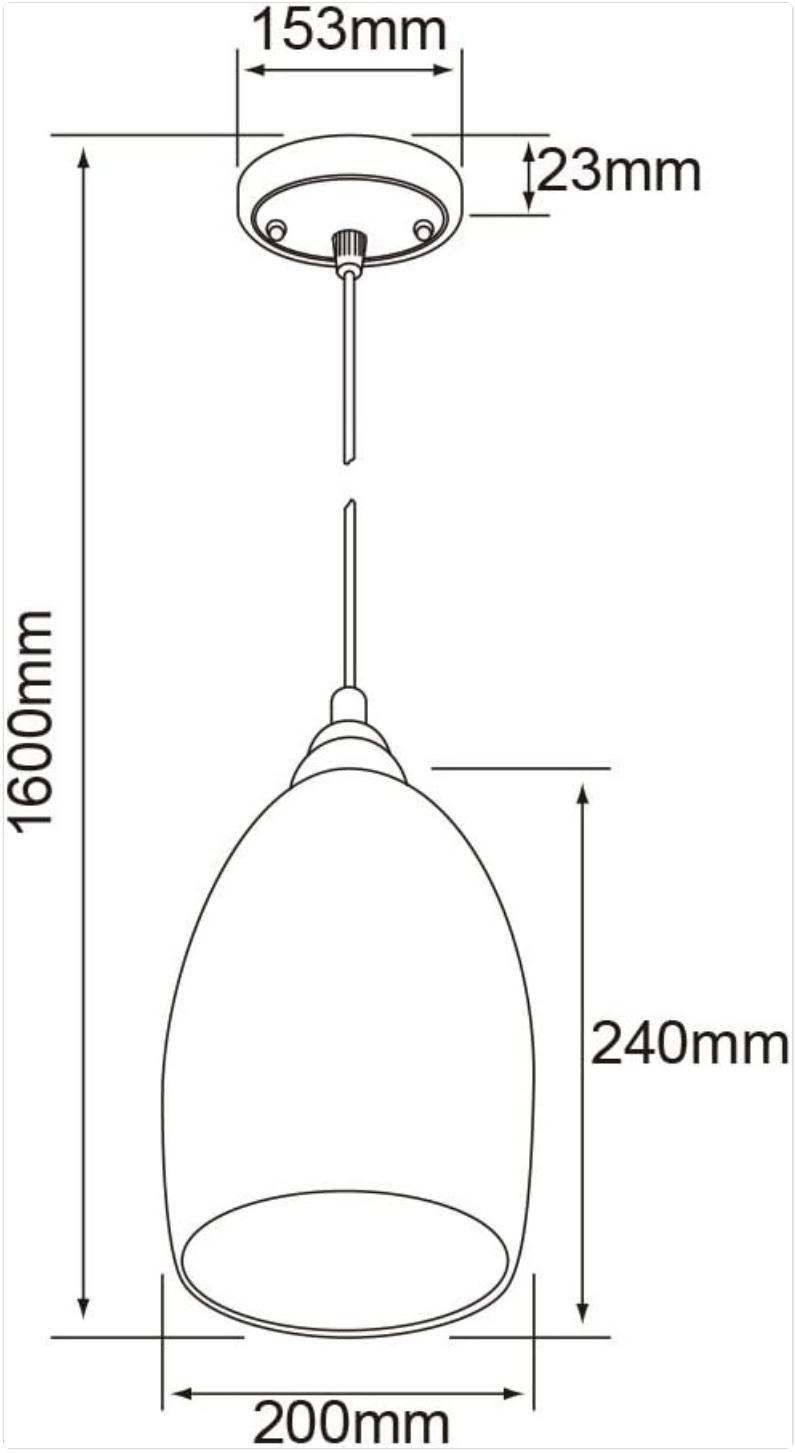

Figure 4.1: Technical drawing showing dimensions and components for installation reference.



Figure 4.2: Example of the pendant lamp installed in an interior setting.

Once installation is complete, restore power at the circuit breaker.

5. Operating Instructions

The Tecnolite CTL-1900/OP Pendant Lamp operates via a standard wall switch connected to its electrical circuit. Simply toggle the wall switch to turn the lamp ON or OFF.

- Ensure the correct type of bulb (E27 base, LED A19 suggested) is installed.
- Do not use dimmers unless the installed bulb is explicitly rated as dimmable and compatible with your dimmer switch.

6. Maintenance

Regular maintenance will help preserve the appearance and functionality of your pendant lamp.

- **Cleaning:** Always turn off the power and allow the lamp to cool before cleaning. Wipe the fixture and glass shade with

a soft, dry, or slightly damp cloth. Do not use abrasive cleaners, solvents, or polishes as they may damage the finish.

- **Bulb Replacement:** Ensure the power is off and the bulb has cooled. Unscrew the old bulb and screw in a new E27 base LED A19 bulb.
- **Inspection:** Periodically check for any loose wiring or damaged components. If any issues are found, consult a qualified electrician.

7. Troubleshooting

If you encounter issues with your pendant lamp, refer to the following common problems and solutions:

Problem	Possible Cause	Solution
Lamp does not light up.	No power to the fixture. Bulb is faulty or loose. Incorrect wiring.	Check circuit breaker and wall switch. Tighten or replace bulb. Consult a qualified electrician to check wiring.
Light flickers.	Loose bulb. Incompatible dimmer switch. Faulty bulb.	Tighten bulb. Ensure bulb and dimmer are compatible. Replace bulb.
Lamp makes buzzing noise.	Incompatible bulb or dimmer.	Ensure bulb and dimmer are compatible. Try a different bulb.

If the problem persists after trying these solutions, contact Tecnolite customer support or a qualified electrician.

8. Specifications

Detailed technical specifications for the Tecnolite CTL-1900/OP Pendant Lamp:

Model Number	CTL-1900/OP
Brand	Tecnolite
Color	Opal Glass
Style	Contemporary
Material	Alloy Steel
Power Source	Corded Electric
Voltage	127 Volts
Bulb Type (Suggested)	LED (E27 base, A19)
Plug Profile	Ceiling Mount
Usage	Indoor Use Only
Dimensions (L x W x H)	20 x 20 x 160 cm (7.87 x 7.87 x 62.99 inches)

Weight	1.48 Kilograms (3.26 lbs)

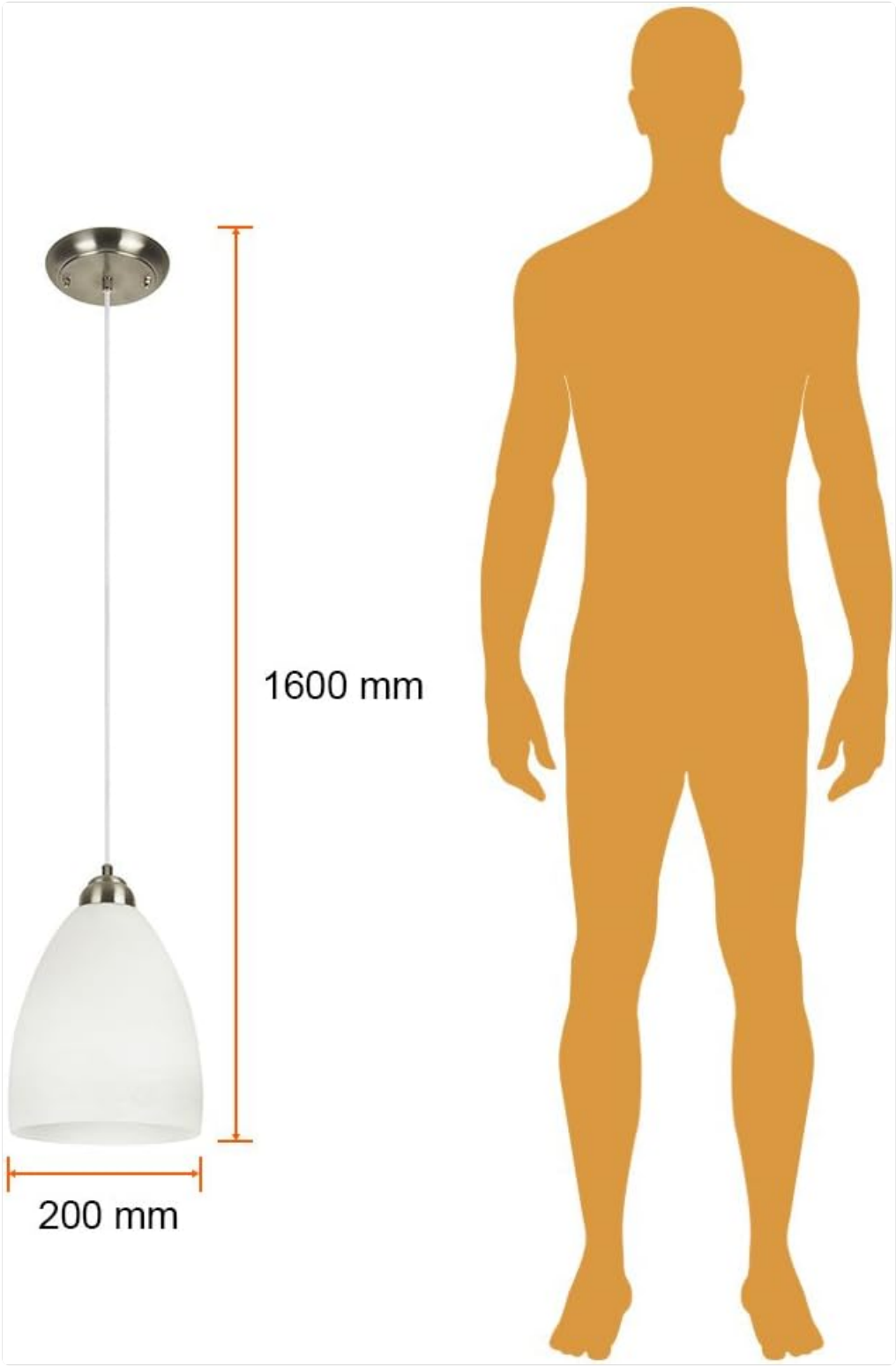

Figure 8.1: Visual representation of the lamp's dimensions (200mm width, 1600mm total height).

9. Warranty and Support

The Tecnolite CTL-1900/OP Pendant Lamp comes with a **1-year warranty** from the date of purchase, covering manufacturing defects.

For warranty claims, technical support, or inquiries, please contact Tecnolite customer service through their official website or the retailer where the product was purchased. Please have your proof of purchase and model number (CTL-1900/OP) ready when contacting support.

For more information and to explore other Tecnolite products, visit the official Tecnolite store:Tecnolite Store on Amazon

© 2024 Tecnolite. All rights reserved.

Ask a question about this manual

Ask about setup, troubleshooting, compatibility, parts, safety, or missing instructions. Manuals+ will review the question and use this page's manual context to help answer it.

Name

Anonymous

Email

you@example.com

After a successful submission, we securely hash the supplied account or form email before sending it to Microsoft Advertising for conversion attribution. Privacy details.

Question

Example: How do I reset this device or fix this error?

Details

Model number, symptoms, what you tried, or the section of the manual you are using.

Submit question

Open the live page

https://manuals.plus/asin/B00V7G17SA

More documents and user manuals: **https://manuals.plus/**