Case G159

Case G159 Engine Service Manual

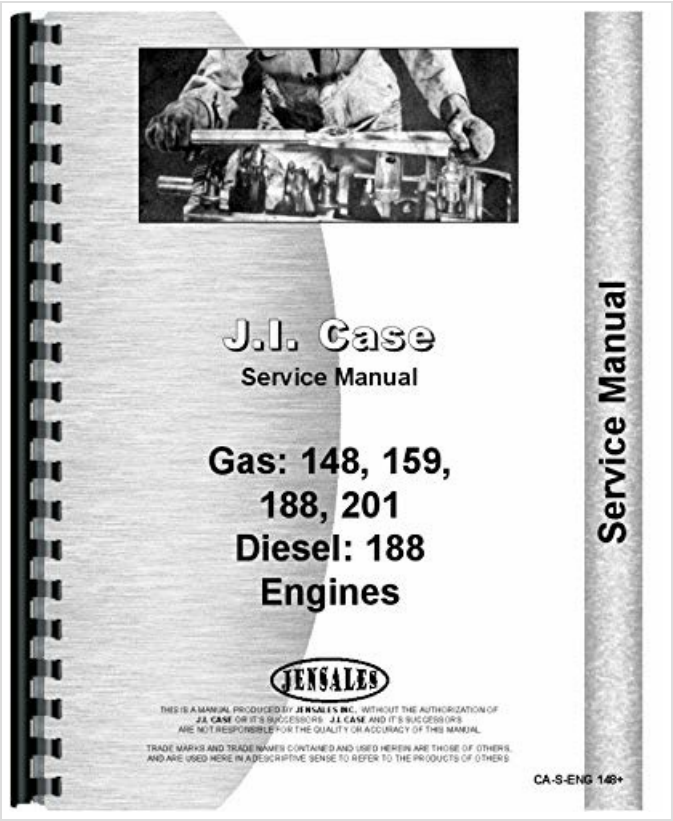

This manual is a reproduction of the original factory manual, containing identical information, pictures, and values.

1. Introduction

This manual provides essential information for the service, maintenance, and repair of Case G159 engines. It is designed for technicians and individuals performing work on these engines, offering detailed specifications, procedures, and diagrams to ensure proper operation and longevity. Adherence to the instructions within this manual is crucial for safety and optimal engine performance.

2. General Engine Specifications

This section outlines the key specifications for both Spark Ignition and Diesel versions of the Case G159 engine. These details are fundamental for accurate diagnosis, repair, and component replacement.

2.1. Spark Ignition Engines

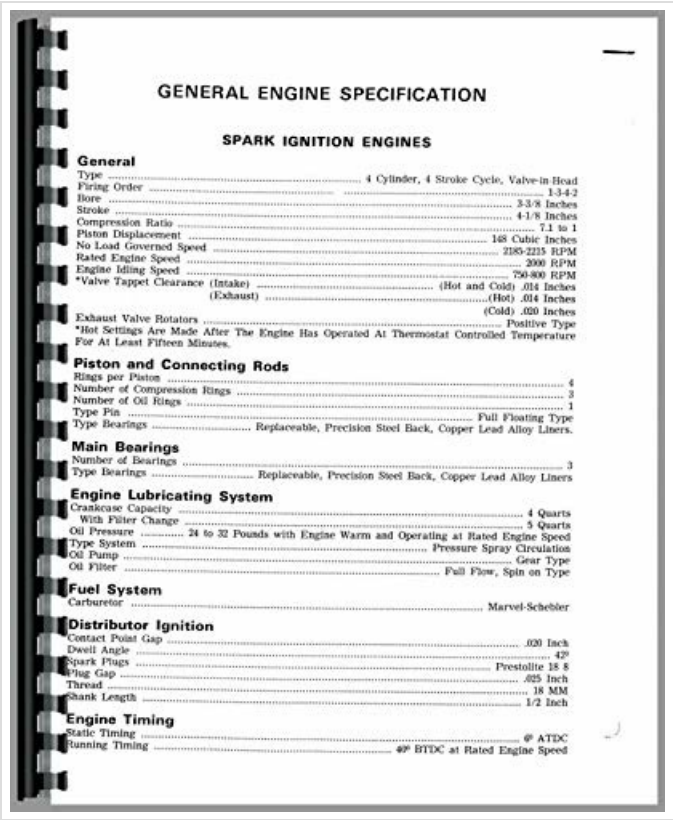

GENERAL ENGINE SPECIFICATION

SPARK IGNITION ENGINES

General

Type	4 Cylinder, 4 Stroke Cycle, Valve-in-Head
Firing Order	1-3-4-2
Bore	3-3/8 Inches
Stroke	4-1/8 Inches
Compression Ratio	7.1 to 1
Piston Displacement	168 Cubic Inches
No Load Governed Speed	2185-2215 RPM
Rated Engine Speed	2000 RPM
Engine Idling Speed	750-800 RPM
*Valve Tappet Clearance (Intake)	(Hot and Cold) .014 Inches
(Exhaust)	(Hot) .014 Inches
	(Cold) .020 Inches
Exhaust Valve Rotators	Positive Type

*Hot Settings Are Made After The Engine Has Operated At Thermostat Controlled Temperature For At Least Fifteen Minutes.

Piston and Connecting Rods

Rings per Piston	4
Number of Compression Rings	3
Number of Oil Rings	1
Type Pin	Full Floating Type
Type Bearings	Replaceable, Precision Steel Back, Copper Lead Alloy Liners.

Main Bearings

Number of Bearings	3
Type Bearings	Replaceable, Precision Steel Back, Copper Lead Alloy Liners

Engine Lubricating System

Crankcase Capacity	4 Quarts
With Filter Change	5 Quarts
Oil Pressure	24 to 32 Pounds with Engine Warm and Operating at Rated Engine Speed
Type System	Pressure Spray Circulation
Oil Pump	Gear Type
Oil Filter	Full Flow, Spin on Type

Fuel System

Carburetor	Marvel-Schebler

Distributor Ignition

Contact Point Gap	.020 Inch
Dwell Angle	42°
Spark Plugs	Prestolite 18 8
Plug Gap	.025 Inch
Thread	18 MM
Shank Length	1/2 Inch

Engine Timing

Static Timing	6° ATDC
Running Timing	40° BTDC at Rated Engine Speed

Image Description: A page from the service manual detailing general engine specifications for Case G159 Spark Ignition Engines. It lists parameters such as engine type (4 Cylinder, 4 Stroke Cycle, Valve-in-Head), firing order (1-3-4-2), bore (3-3/8 Inches), stroke (4-1/8 Inches), piston displacement (168 Cubic Inches), compression ratio (7.1 to 1), and various RPMs (No Load Governed Speed, Rated Engine Speed, Engine Idling Speed). It also includes valve tappet clearance, exhaust valve rotators, piston and connecting rod details (rings per piston, number of compression rings, number of oil rings, type of piston, type of bearing), main bearings (number of bearings, type of bearings), engine lubricating system (crankcase capacity, oil pressure, oil pump, oil filter), fuel system (carburetor), distributor ignition (contact point gap, dwell angle, spark plug gap, thread, crank length), and engine timing (static timing, running timing).

Key Spark Ignition Engine Specifications:

- **Type:** 4 Cylinder, 4 Stroke Cycle, Valve-in-Head
- **Firing Order:** 1-3-4-2
- **Bore:** 3-3/8 Inches
- **Stroke:** 4-1/8 Inches
- **Piston Displacement:** 168 Cubic Inches
- **Compression Ratio:** 7.1 to 1
- **Rated Engine Speed:** 2000 RPM
- **Valve Tappet Clearance (Intake/Exhaust):** .014 Inches (Hot and Cold)
- **Crankcase Capacity:** 4 Quarts
- **Oil Pressure:** 24 to 32 Pounds with Engine Warm and Operating at Rated Engine Speed
- **Carburetor:** Marvel-Schebler
- **Static Timing:** @ ATDC

2.2. Diesel Engines

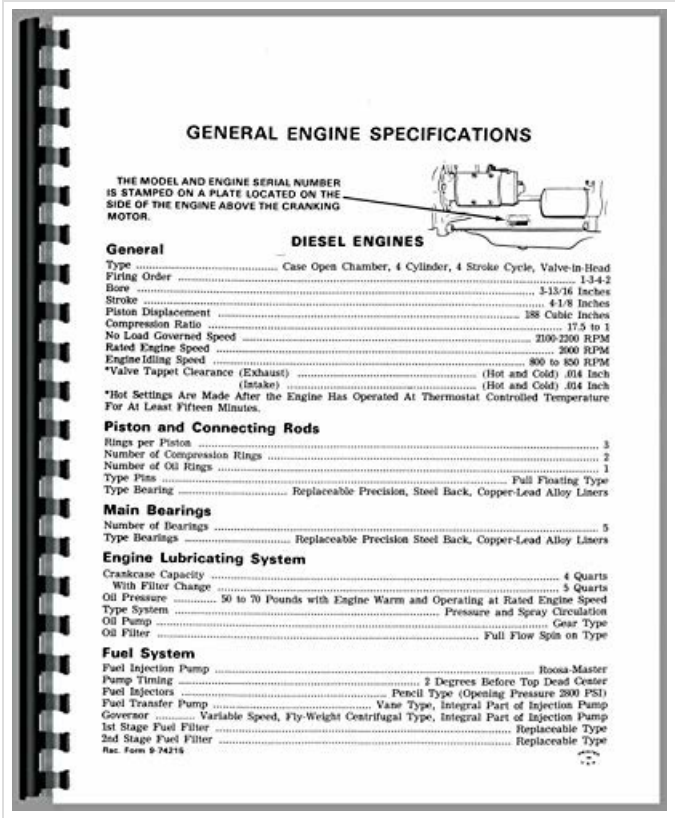

GENERAL ENGINE SPECIFICATIONS

THE MODEL AND ENGINE SERIAL NUMBER IS STAMPED ON A PLATE LOCATED ON THE SIDE OF THE ENGINE ABOVE THE CRANKING MOTOR.

DIESEL ENGINES

General

Type	Case Open Chamber, 4 Cylinder, 4 Stroke Cycle, Valve-in-Head
Firing Order	1-3-4-2
Bore	3-13/16 Inches
Stroke	4-1/8 Inches
Piston Displacement	188 Cubic Inches
Compression Ratio	17.5 to 1
No Load Governed Speed	2100-2300 RPM
Rated Engine Speed	2000 RPM
Engine Idling Speed	800 to 850 RPM
*Valve Tappet Clearance (Exhaust)	(Hot and Cold) .014 Inch
(Intake)	(Hot and Cold) .014 Inch

*Hot Settings Are Made After the Engine Has Operated At Thermostat Controlled Temperature For At Least Fifteen Minutes.

Piston and Connecting Rods

Rings per Piston	3
Number of Compression Rings	2
Number of Oil Rings	1
Type Pins	Full Floating Type
Type Bearing	Replaceable Precision, Steel Back, Copper-Lead Alloy Liners

Main Bearings

Number of Bearings	5
Type Bearings	Replaceable Precision Steel Back, Copper-Lead Alloy Liners

Engine Lubricating System

Crankcase Capacity	4 Quarts
With Filter Change	5 Quarts
Oil Pressure	50 to 70 Pounds with Engine Warm and Operating at Rated Engine Speed
Type System	Pressure and Spray Circulation
Oil Pump	Gear Type
Oil Filter	Full Flow Spin on Type

Fuel System

Fuel Injection Pump	Roosa-Master
Pump Timing	2 Degrees Before Top Dead Center
Fuel Injectors	Pencil Type (Opening Pressure 2800 PSI)
Fuel Transfer Pump	Vane Type, Integral Part of Injection Pump
Governor	Variable Speed, Fly-Weight Centrifugal Type, Integral Part of Injection Pump
1st Stage Fuel Filter	Replaceable Type
2nd Stage Fuel Filter	Replaceable Type

Rec. Form 9-74215

Image Description: A page from the service manual detailing general engine specifications for Case G159 Diesel Engines. It includes an illustration showing the model and engine serial number location on the side of the engine above the cranking motor. Specifications listed include engine type (Case Open Chamber, 4 Cylinder, 4 Stroke Cycle, Valve-in-Head), firing order (1-3-4-2), bore (3-3/8 Inches), stroke (4-1/8 Inches), piston displacement (188 Cubic Inches), compression ratio (17.5 to 1), and various RPMs (No Load Governed Speed, Rated Engine Speed, Engine Idling Speed). It also covers valve tappet clearance, piston and connecting rod details, main bearings, engine lubricating system (crankcase capacity, oil pressure, oil pump, oil filter), and fuel system (fuel injection pump, pump timing, nozzle, fuel transfer pump, governor, fuel filters).

Key Diesel Engine Specifications:

- **Type:** Case Open Chamber, 4 Cylinder, 4 Stroke Cycle, Valve-in-Head
- **Firing Order:** 1-3-4-2
- **Bore:** 3-3/8 Inches
- **Stroke:** 4-1/8 Inches
- **Piston Displacement:** 188 Cubic Inches
- **Compression Ratio:** 17.5 to 1
- **Rated Engine Speed:** 2000 RPM
- **Valve Tappet Clearance (Intake/Exhaust):** .014 Inches (Hot and Cold)
- **Crankcase Capacity:** 5 Quarts
- **Oil Pressure:** 50 to 70 Pounds with Engine Warm and Operating at Rated Engine Speed
- **Fuel Injection Pump:** Roosa-Master
- **Pump Timing:** 2 Degrees Before Top Dead Center

3. Maintenance Procedures

Regular maintenance is critical for the longevity and reliable operation of your Case G159 engine. This section outlines general maintenance tasks.

- **Oil and Filter Changes:** Refer to the specifications for recommended oil types and change intervals.

Ensure the oil filter is replaced with a compatible part.

- **Fuel System Checks:** Regularly inspect fuel lines, filters, and connections for leaks or blockages. Replace fuel filters as per schedule to prevent contamination.
- **Cooling System Inspection:** Check coolant levels, hose conditions, and radiator for debris. Ensure the cooling system operates efficiently to prevent overheating.
- **Ignition System (Spark Ignition):** Inspect spark plugs, ignition wires, and distributor components for wear. Adjust contact point gap and timing as specified.
- **Valve Tappet Adjustment:** Periodically check and adjust valve tappet clearance to maintain proper engine breathing and performance.
- **Belt Tension:** Verify the tension of all drive belts (e.g., fan belt, alternator belt) and adjust or replace as necessary.

4. Repair and Assembly Diagrams

Detailed diagrams are provided to assist in the disassembly, inspection, and reassembly of engine components. Always refer to the specific section of the full manual for step-by-step instructions.

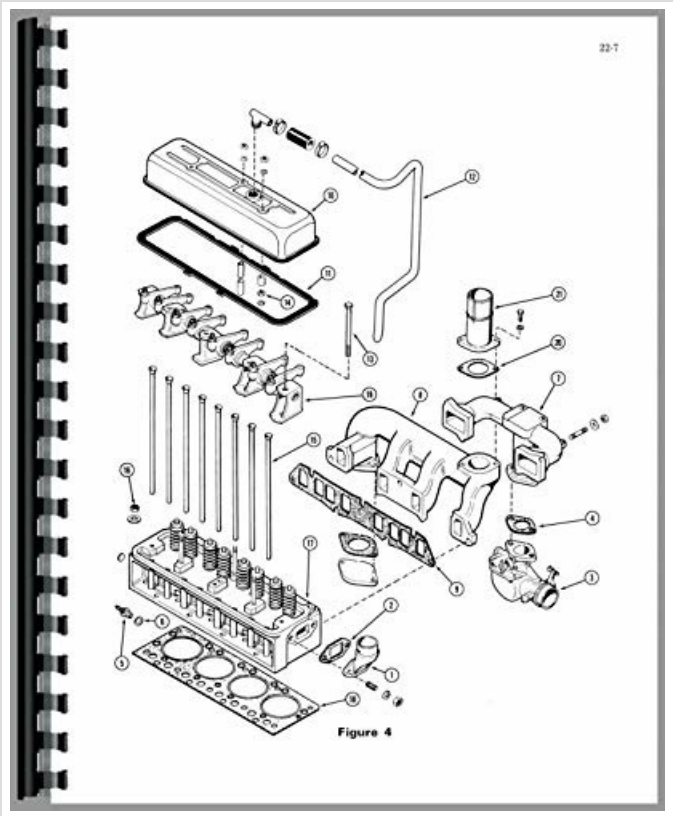

Image Description: An exploded view diagram illustrating the components of a Case G159 engine's cylinder head, valve train, and intake/exhaust manifolds. Key components are numbered and include the valve cover, rocker arm assembly, pushrods, cylinder head, intake manifold, exhaust manifold, gaskets, and various fasteners. This diagram is essential for identifying parts during disassembly and ensuring correct reassembly.

When performing repairs, pay close attention to torque specifications for all fasteners and ensure all gaskets and seals are replaced with new ones to prevent leaks.

5. Troubleshooting Common Issues

This section provides guidance on diagnosing common engine problems. For detailed troubleshooting trees and specific repair steps, consult the relevant chapters of the complete service manual.

- **Engine Fails to Start:** Check fuel supply, ignition system (spark ignition), battery charge, and starter

motor operation.

- **Engine Runs Rough/Misfires:** Inspect spark plugs, fuel injectors (diesel), air filter, and compression.
- **Overheating:** Verify coolant level, radiator condition, thermostat function, and water pump operation.
- **Loss of Power:** Examine fuel delivery, air intake restrictions, turbocharger (if applicable), and engine timing.
- **Excessive Smoke:** Diagnose based on smoke color (blue for oil, black for rich fuel, white for coolant/steam).

6. Additional Information

For further assistance or to purchase replacement parts, please refer to official Case service centers or authorized dealers. Always use genuine Case parts for optimal performance and compatibility.

This manual is a comprehensive guide for the Case G159 engine series, providing the necessary information to maintain and repair your engine effectively.