Manuals+
Q & A | Deep Search | Upload

Monoprice 108678

Monoprice Ultra-Slim Full-Motion Articulating TV Wall Mount Bracket (Model 108678) User Manual

For 40" ~ 75" TVs, Max Weight 110 lbs, VESA up to 400x400

Introduction

Thank you for choosing the Monoprice Ultra-Slim Full-Motion Articulating TV Wall Mount Bracket. This manual provides essential information for the safe and correct installation, operation, and maintenance of your TV wall mount. This bracket is designed to securely hold your television while offering maximum flexibility for viewing angles, including extension, tilt, and swivel capabilities. Please read this manual thoroughly before installation and retain it for future reference.

Safety Information

WARNING: Improper installation may result in serious personal injury and property damage. If you do not understand these instructions, or have doubts about the safety of the installation, please contact a qualified installer.

- Ensure the mounting surface can safely support the combined weight of the mount and the television.
- Do not exceed the maximum weight capacity of 110 lbs (50 kg).
- Verify the VESA mounting pattern of your TV is compatible with the mount (100x200 to 400x400).
- Always use the provided mounting hardware. If your installation requires different hardware, consult a professional.
- This mount is compatible with concrete and brick walls. For wood stud installation, ensure studs are located accurately and securely.
- Keep children and pets away during installation.

Package Contents

Please check to ensure all components are present and undamaged:

- TV Wall Mount Bracket

- Mounting Hardware Kit (various screws, washers, spacers)
- Mounting Template
- Bubble Level

Specifications

Model Number	108678
Brand	Monoprice
Mounting Type	TV Wall Mount
Movement Type	Articulating, Full-Motion
Compatible TV Sizes	40" ~ 75"
Maximum Weight Capacity	110 lbs (50 kg)
VESA Compatibility	100x200 to 400x400
Profile (Distance from Wall)	0.77" (retracted) to 9.8" (extended)
Maximum Tilt Angle	Adjustable, up to 15 degrees (as per product description, images show different ranges for different axes)
Swivel Range	Up to 60 degrees (depending on TV size)
Material	Steel Construction (Concrete & Brick Compatible)
Color	Black
Product Dimensions	20.7 x 8.1 x 0.7 inches (mount dimensions when retracted)
Item Weight	10.2 pounds

Note: Maximum tilt and swivel angles may vary based on TV size and wall clearance.

Setup and Installation

Before beginning installation, ensure you have all necessary tools (e.g., drill, stud finder, screwdriver, wrench) and that your wall type is suitable for mounting. This mount is designed for concrete, brick, or wood stud walls.

Step 1: Prepare the Wall Plate

Using the provided mounting template, mark the desired location for the wall plate on your wall. Ensure the location is level using the included bubble level. Drill pilot holes according to the template and your wall type. Secure the wall plate to the wall using the appropriate hardware from the kit.

Step 2: Attach TV Brackets

Identify the correct screws and spacers from the hardware kit that fit your TV's VESA mounting holes. Attach the two vertical TV brackets to the back of your television. Ensure they are securely fastened and centered.

Step 3: Mount TV to Wall Plate

Carefully lift the television with the attached brackets and hook them onto the wall plate. Secure the TV to the wall plate using the locking mechanisms or screws as indicated in the detailed instructions provided with the physical product.

Image: The Monoprice Ultra-Slim Full-Motion TV Wall Mount Bracket securely installed on a wall, holding a television. This image illustrates the sleek, low-profile appearance of the mount when in use.

Step 4: Cable Management

Utilize the built-in cable management system to route and conceal cables for a clean and organized appearance. This helps prevent cable damage and maintains the aesthetic of your installation.

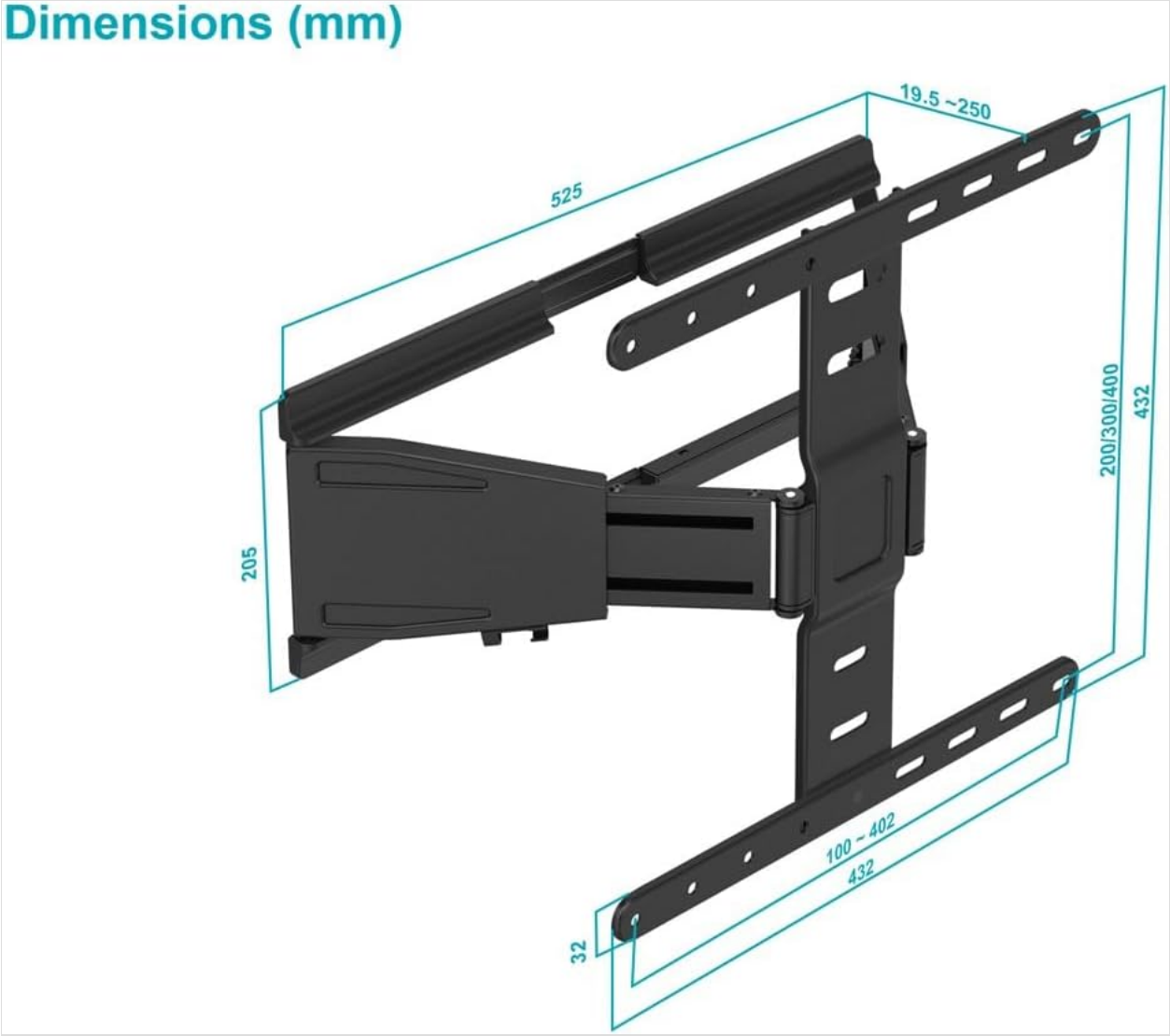

Image: A technical diagram illustrating the dimensions of the Monoprice Ultra-Slim Full-Motion TV Wall Mount Bracket in millimeters, providing detailed measurements for planning installation.

Operating Instructions

The Monoprice Ultra-Slim Full-Motion mount offers versatile adjustments for optimal viewing.

Adjusting Extension and Retraction

Gently pull or push the television to extend it up to 9.8 inches from the wall or retract it to a minimum distance of 0.77 inches. Ensure smooth movement and avoid sudden forceful actions.

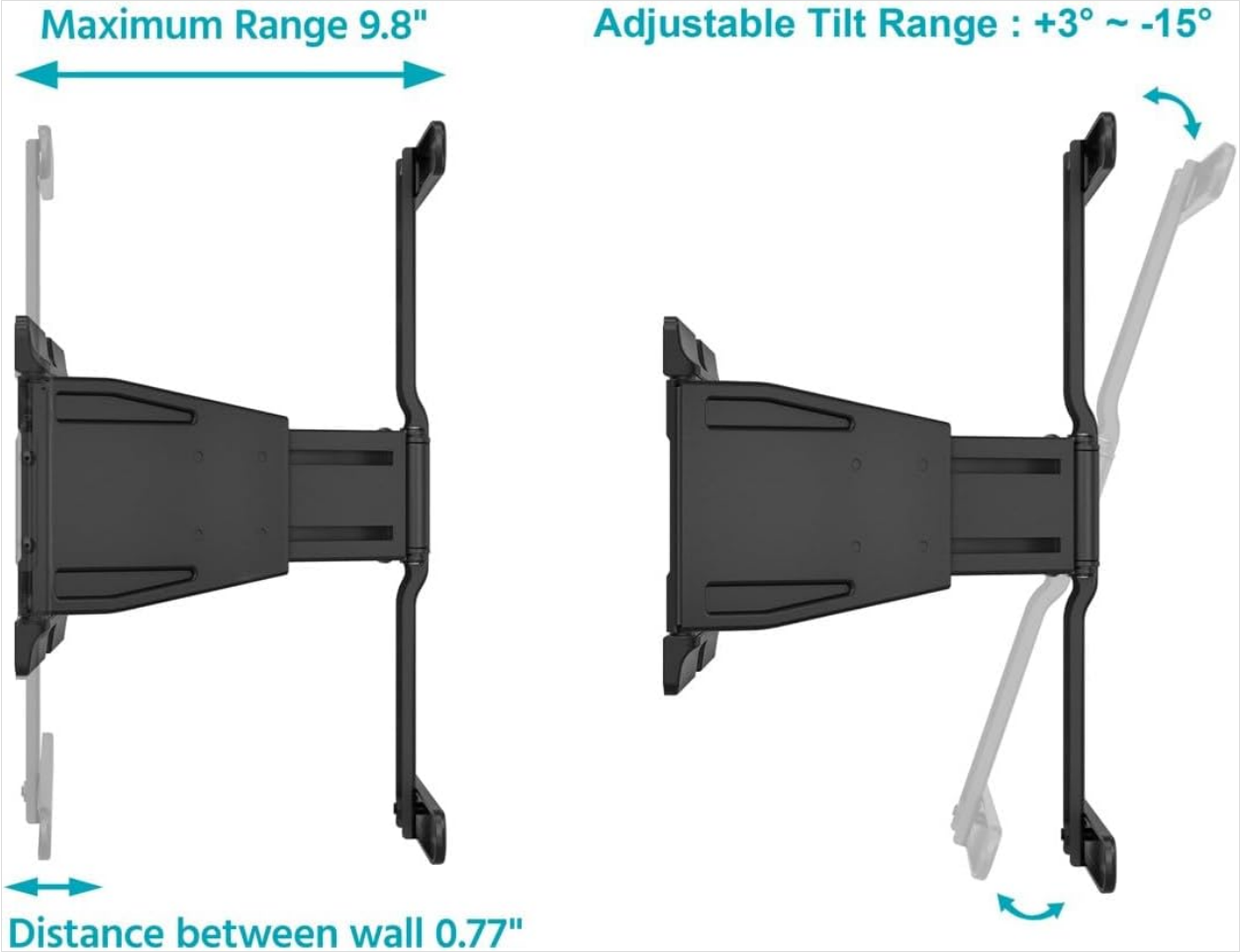

Image: A side-view diagram illustrating the maximum extension range of 9.8 inches from the wall and the minimum distance of 0.77 inches when retracted. It also shows an adjustable tilt range of +3° to -15°.

Adjusting Tilt

The mount allows for upward or downward tilt to reduce glare and optimize viewing angles. Loosen the tilt adjustment knobs or bolts (if applicable), adjust the screen to the desired angle, and then securely tighten them. The maximum tilt angle is approximately 15 degrees.

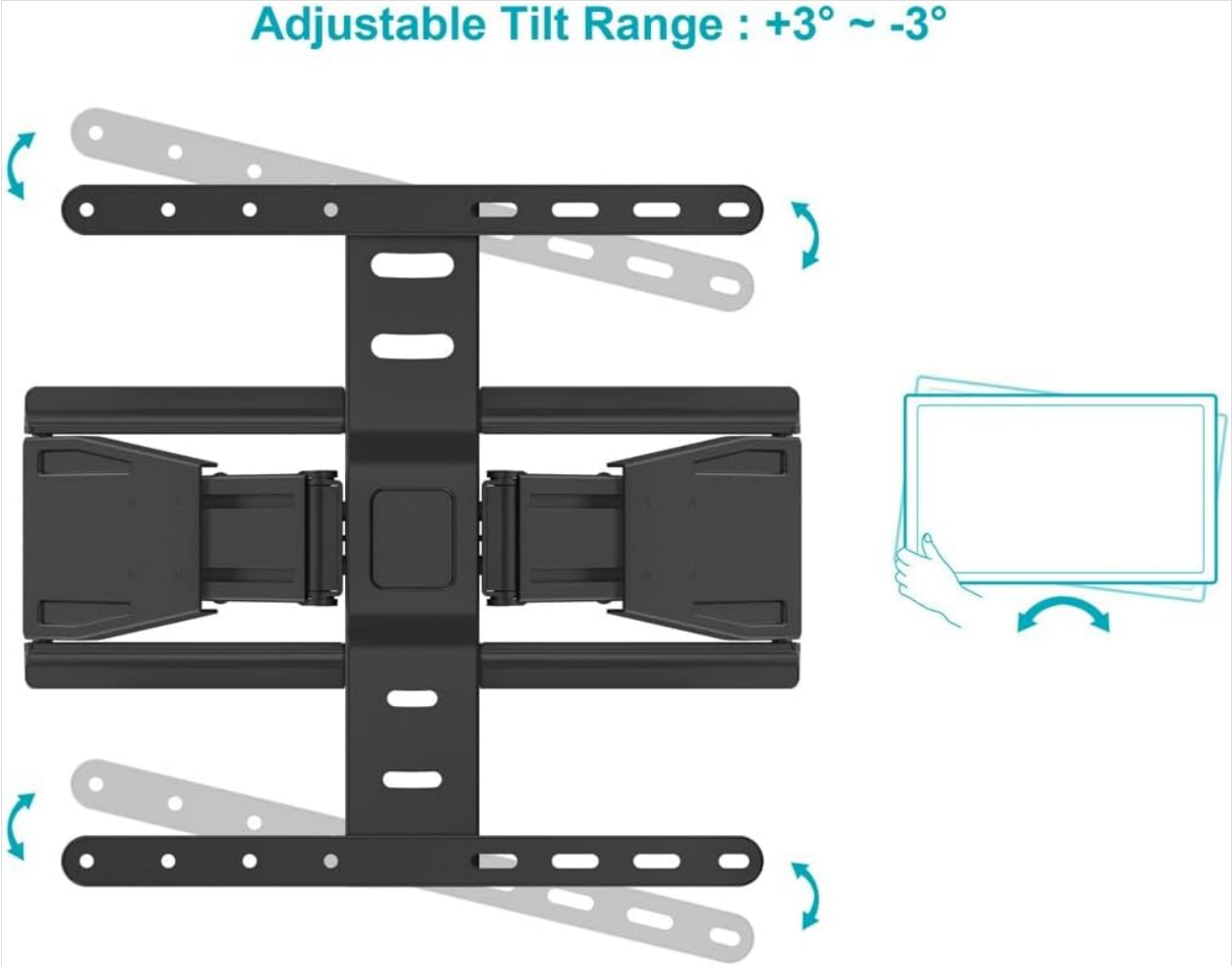

Image: A diagram illustrating the adjustable tilt range of the TV wall mount, showing the ability to tilt the screen upwards and downwards by approximately 3 degrees in either direction for optimal viewing.

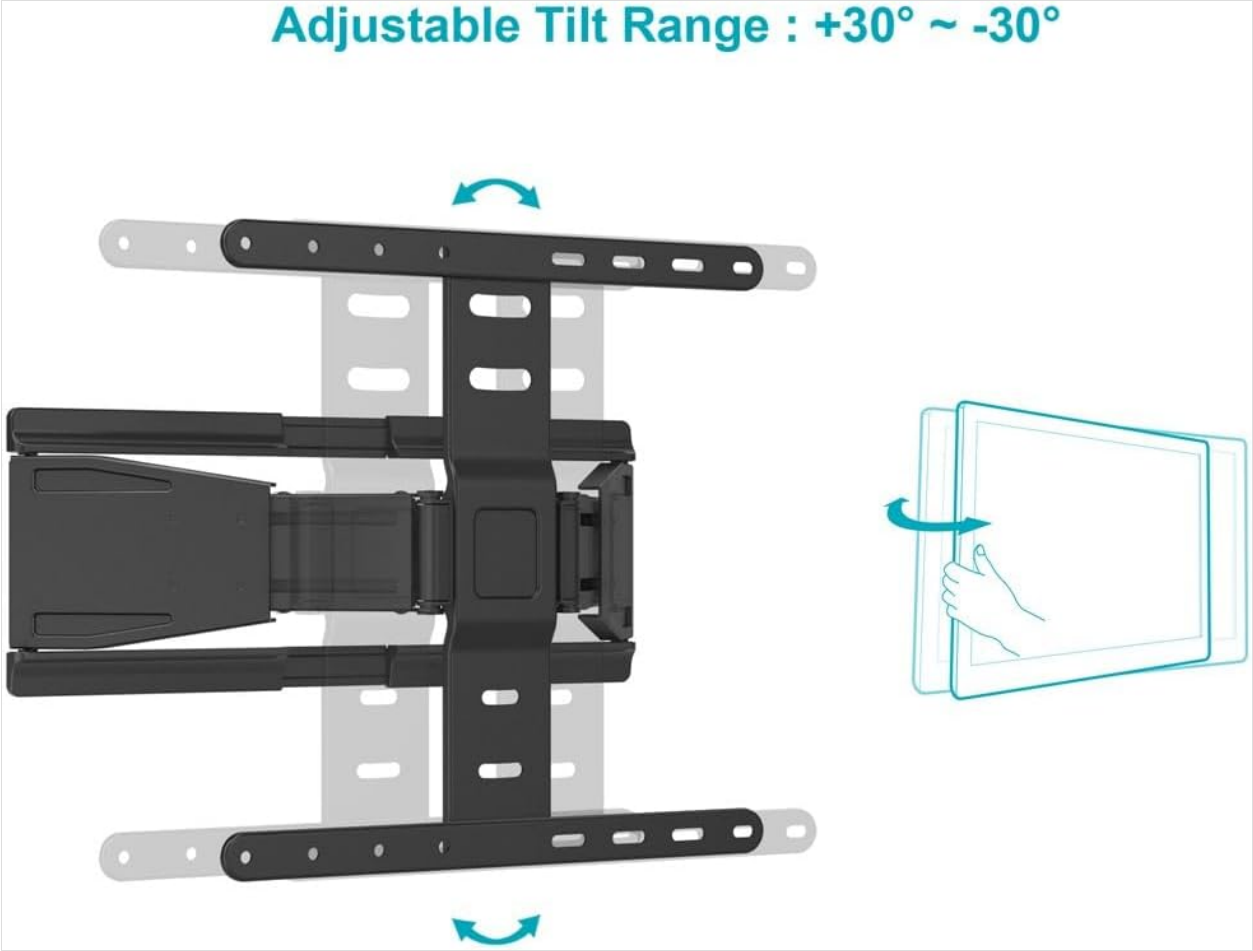

Image: A diagram demonstrating a wider adjustable tilt range of the TV wall mount, allowing for significant upward and downward angle adjustments, up to 30 degrees in either direction, to suit various viewing positions.

Adjusting Swivel

The mount can swivel up to 60 degrees left or right, depending on your TV size and wall clearance. Gently pivot the television to align it with your seating position. Ensure the movement is smooth and does not strain the mount or cables.

Level Rotation Adjustment

The mount includes a level rotation adjustment to ensure your display remains perfectly horizontal. If your TV appears unlevel after installation or adjustment, use the designated mechanism to fine-tune its horizontal position.

Maintenance

- **Cleaning:** Use a soft, dry cloth to clean the mount. Avoid abrasive cleaners or solvents that could damage the finish.
- **Periodic Checks:** Periodically inspect all screws and connections to ensure they remain tight and secure. Over time, vibrations or frequent adjustments can cause fasteners to loosen.
- **Lubrication:** If the articulating arms become stiff, a small amount of silicone-based lubricant can be applied to the moving joints. Do not use oil-based lubricants.

Troubleshooting

TV is not level

Check the level rotation adjustment feature of the mount. Ensure the wall plate itself was installed level. If necessary, adjust the level rotation mechanism or re-level the wall plate.

Mount is difficult to move or adjust

Ensure all adjustment knobs or bolts are sufficiently loosened before attempting to move the TV. Check for any obstructions. If stiffness persists, apply a small amount of silicone lubricant to the moving joints.

TV feels unstable or loose

Immediately remove the TV from the mount if it feels unstable. Re-check all mounting hardware, including the wall plate fasteners and the TV bracket screws, to ensure they are securely tightened. Verify that the TV's weight and VESA pattern are within the mount's specifications.

Cables are pinched or damaged

Ensure all cables are routed through the integrated cable management system. Avoid over-tightening cable ties. When adjusting the TV's position, always check that cables have sufficient slack and are not being pinched.

Warranty and Support

For warranty information, technical support, or to inquire about replacement parts, please refer to the official Monoprice website or contact Monoprice customer service directly. Keep your purchase receipt and model

number (108678) handy for faster service.

Monoprice, Inc.

Website: www.monoprice.com

© 2024 Monoprice, Inc. All rights reserved. Specifications are subject to change without notice.