Manuals+
Q & A | Deep Search | Upload

REED DM3MECH

REED DM3MECH Mechanical Hot Tapping Machine Instruction Manual

Model: DM3MECH

Introduction

The REED DM3MECH Mechanical Hot Tapping Machine is designed for creating branch connections in pressurized pipelines without interrupting service. This machine facilitates cutting or drilling into copper, steel, or plastic pipes for valve installations up to 4 inches. It is suitable for various applications, including water, gas, and steam systems.

This manual provides essential information for the safe and efficient operation, maintenance, and troubleshooting of your DM3MECH machine. Please read it thoroughly before use.

Safety Information

Always prioritize safety when operating the DM3MECH Hot Tapping Machine. Failure to follow safety guidelines can result in serious injury or property damage.

- **Personal Protective Equipment (PPE):** Always wear appropriate PPE, including safety glasses, gloves, and protective clothing.
- **Pressure Ratings:** Do not exceed the specified pressure ratings: 300 psi for ambient temperatures and 125 psi for steam systems.
- **Pipe Material Compatibility:** Ensure the machine and hole saws are compatible with the pipe material (copper, steel, plastic).
- **Secure Setup:** Ensure the machine is securely clamped to the pipe and the valve is properly installed before beginning the tapping process.
- **Read Instructions:** Familiarize yourself with all operating procedures before attempting to use the machine.
- **Emergency Procedures:** Know how to shut down the system and relieve pressure in case of an emergency.

Package Contents

The REED DM3MECH Mechanical Hot Tapping Machine package includes the following components:

- Base Tapping Machine Unit
- 7/16" Hex Arbor
- 1/4" Drill Bit
- Hole Saws: 5/8", 7/8", 1 1/8", 1 3/8", 1 3/4", 2 1/4", 3 1/4"
- Allen Wrenches (various sizes)
- Toolbox

Figure 1: All components of the REED DM3MECH Mechanical Hot Tapping Machine kit, including the main unit, various hole saws, arbor, drill bit, and Allen wrenches, displayed outside their black carrying case.

Setup Instructions

1. **Prepare the Work Area:** Ensure the work area is clean, well-lit, and free from obstructions. Verify that the pipe section to be tapped is accessible and stable.
2. **Select Hole Saw:** Choose the appropriate hole saw size based on the valve or fitting to be installed.
3. **Assemble Arbor and Drill Bit:** Attach the selected hole saw to the 7/16" Hex Arbor. Insert the 1/4" drill bit into the arbor and secure it.
4. **Attach to Machine:** Securely fasten the assembled arbor with the hole saw and drill bit to the main tapping machine unit.
5. **Install Valve:** Install the appropriate valve onto the pipe at the desired tapping location. Ensure the valve is fully open.
6. **Mount Machine:** Mount the DM3MECH machine onto the open valve, ensuring a tight and secure connection. Use the machine's clamping mechanism to firmly attach it to the valve.

7. **Verify Seal:** Confirm that all connections are properly sealed to prevent leaks during the tapping process.

Operating Instructions

1. **Advance Cutter:** Slowly advance the cutter assembly until the pilot drill bit makes contact with the pipe wall.
2. **Begin Drilling:** Apply steady, even pressure and rotate the handle to begin drilling. The pilot drill will guide the hole saw.
3. **Continue Tapping:** Continue rotating and advancing the cutter until the hole saw has completely cut through the pipe wall. You will feel a change in resistance once the cut is complete.
4. **Retract Cutter:** Once the cut is complete, slowly retract the cutter assembly, bringing the cut pipe coupon back with it.
5. **Close Valve:** Fully close the valve to isolate the newly tapped connection from the pressurized pipeline.
6. **Remove Machine:** Carefully remove the DM3MECH machine from the valve. The pipe coupon will be retained within the machine.
7. **Inspect and Clean:** Inspect the newly tapped hole for any debris. Remove the pipe coupon from the machine and clean the hole saw.

Maintenance

- **Cleaning:** After each use, clean all components of the DM3MECH machine, especially the hole saws and arbor, to remove pipe debris and cutting fluids.
- **Lubrication:** Periodically lubricate moving parts and threads with a suitable lubricant to ensure smooth operation and prevent corrosion.
- **Inspection:** Regularly inspect hole saws for wear or damage. Replace dull or damaged saws to maintain cutting efficiency and safety. Check the drill bit for sharpness.
- **Storage:** Store the machine and its components in the provided toolbox in a dry, clean environment to protect them from damage and corrosion.

Troubleshooting

Problem	Possible Cause	Solution
Difficulty cutting	Dull hole saw or drill bit; insufficient pressure; incorrect speed.	Replace hole saw/drill bit; apply steady, even pressure; ensure proper rotation speed.
Leaking during operation	Improperly sealed connections; damaged O-rings/gaskets.	Check all connections for tightness; replace damaged seals. Immediately stop operation and relieve pressure if a leak occurs.
Cutter jams	Excessive force; debris accumulation; incorrect alignment.	Retract cutter, clear debris, check alignment, and re-attempt with controlled force.

Specifications

- **Model:** DM3MECH
- **Brand:** REED
- **Tapping Capacity:** Up to 4" valves
- **Compatible Pipe Materials:** Copper, Steel, Plastic
- **Pressure Rating (Ambient):** 300 psi
- **Pressure Rating (Steam):** 125 psi
- **Included Hole Saw Sizes:** 5/8", 7/8", 1 1/8", 1 3/8", 1 3/4", 2 1/4", 3 1/4"
- **Arbor:** 7/16" Hex
- **Drill Bit:** 1/4"
- **Item Weight:** 13.67 pounds (6.21 kg)
- **Product Dimensions:** 12.5 x 4 x 2.5 inches
- **Blade Material:** High Speed Steel
- **Handle Material:** Thermoplastic Elastomers

Warranty Information

The REED DM3MECH Mechanical Hot Tapping Machine comes with a Lifetime Warranty. This warranty covers defects in materials and workmanship under normal use. For specific terms and conditions, please refer to the official REED Tool warranty documentation or contact customer support.

Customer Support

For technical assistance, replacement parts, or warranty claims, please contact REED Tool customer support.

Visit the official REED website for the most up-to-date contact information and resources:www.reedmfgco.com

© 2024 REED Tool. All rights reserved.

Related Documents - DM3MECH

	REED Rotary Pipe Cutter User Manual and Operating Instructions Comprehensive user manual for REED Rotary Pipe Cutters (RC20, RC24, RC30, RC36, RC42), detailing operation, maintenance, parts lists, and warranty information.
	REED Bevel Boss Cordless Pipe Beveler Instructions and Assembly Guide Comprehensive instructions and assembly guide for REED Bevel Boss cordless pipe bevelers (CPBDK, CPBDBT, CPBDKE, CPBDADP, CPBMADP, CPBMADP29, CPBBADP) compatible with DeWalt, Milwaukee, and Bosch die grinders. Includes safety, operating, and assembly procedures.
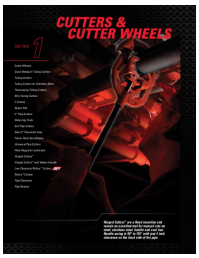	Reed Pipe Cutters & Cutter Wheels Catalog Explore the comprehensive range of Reed Manufacturing Company's pipe cutters and cutter wheels, including tubing cutters, soil pipe cutters, pneumatic saws, and more. Find detailed specifications, model numbers, and features for professional plumbing and industrial applications.
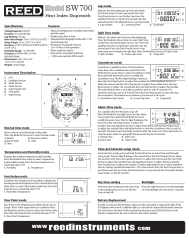	REED SW700 Heat Index Stopwatch User Manual and Features Detailed user manual for the REED SW700 Heat Index Stopwatch, covering specifications, features, modes like lap time, split time, countdown, alarm, temperature, humidity, heat index, and dew point measurements, along with battery replacement.
	REED R8010 Laser Distance Meter Instruction Manual Comprehensive instruction manual for the REED R8010 Laser Distance Meter, covering safety, features, specifications, operating instructions, troubleshooting, and care.
	REED SW600 Stopwatch Instruction Manual and Features Comprehensive guide to the REED SW600 Stopwatch, detailing its features, functions, and operation for accurate timekeeping, split times, alarms, and date settings.

[pdf] User Manual Instructions

Instruction Manual User dm3mech instructions operator s manual Ferguson Query ASSET ID 7828271 USE TYPE INSTALLATION PRODUCT 2924342 api ferguson dar step service |||

Mechanical Hot Tapping Machine Operator s Manual Shown Equipo Mostrado **DM3MECH** #08350 **DM3MECH** and **DM3MECH**BSPT Mechanical Hot Tapping Machine Operator s Manual **DM3MECH** y **DM3MECH**BSPT Manual del operador de la mquina para perforacin mecnica en tubera cargada tapping REED MANUFACTURING 1425 West...

lang:en score:51 filesize: 1.11 M page_count: 12 document date: 2020-08-19

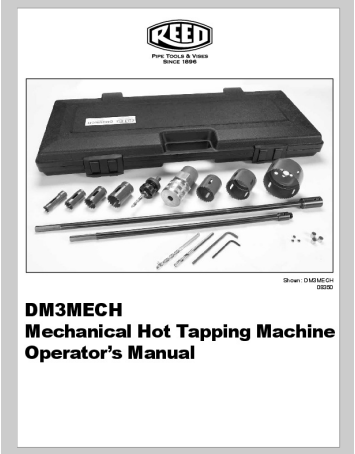

[pdf] User Manual Instructions

Reed Hand Tools Installation Instructions hand tools screwdrivers pliers wrenches hammers ratchets sockets saws chisels tool sets cutters CARiD 08350 installation instructions images carid reed items |||

Shown: **DM3MECH** 08350 **DM3MECH** Mechanical Hot Tapping Machine Operator s Manual Mechanical Hot Tapping Machine Operator s Manual Warning: Applying too much force while cutting the coupon can result in a sudden break through of the hole saw. A sudden break through may result in the coupon retainer ...

lang:en score:36 filesize: 638.91 K page_count: 7 document date: 2021-08-17

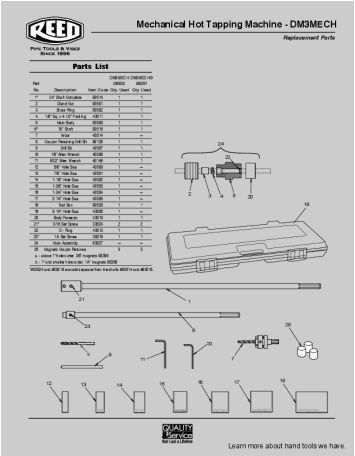

[pdf] Instructions Parts List

Reed Hand Tools Installation Instructions hand tools screwdrivers pliers wrenches hammers ratchets sockets saws chisels tool sets cutters CARiD 08350 installation instructions 2 images carid reed items |||

Mechanical Hot Tapping Machine - **DM3MECH** Replacement Parts Parts List **DM3MECH DM3MECH**B Ref. 08350 08351 No. Description Item Code Qty. Used Qty. Used 1* 24 Shaft Complete 93514 1 1 2 Gland Nut 93501 1 1 3 Brass Ring 93502 1 1 4 1/8 Sq. x 4-1/2 Packing 43511 1 1 5 Main B...

lang:en score:32 filesize: 279.54 K page_count: 1 document date: 2021-08-17

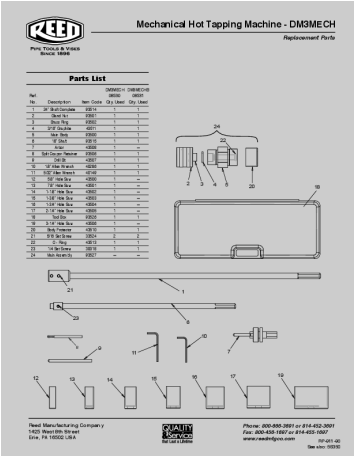

[pdf] Parts List

Replacement Parts Reed Manufacturing DM3MECH Mechanical Hot Tapping Machine Kit 3 4 1316094896 90 dm3mech xrefs0 plumbersstock reed |||

Mechanical Hot Tapping Machine - **DM3MECH** Replacement Parts Parts List **DM3MECH DM3MECH**B Ref. 08530 08531 No. Description Item Code Qty. Used Qty. Used 1 24 Shaft Complete 93514 1 1 2 Gland Nut 93501 1 1 3 Brass Ring 93502 1 1 4 3/16 Graphite 43511 1 1 24 5 Main Body 93...

lang:en score:31 filesize: 222.8 K page_count: 1 document date: 2011-09-15

[pdf] User Manual

58351 Pressure Trap Charles Benson 1294429037 58350 dm3mech instr xrefs0 plumbersstock reed |||

Mechanical Hot Tapping Machine Operator s Manual Shown: **DM3MECH** 08350 **DM3MECH** Mechanical Hot Tapping Machine Operator s Manual REED MANUFACTURING COMPANY 1425 West Eighth St. Erie, PA 16502 USA Phone: 800-666-3691 or 814-452-3691 Fax: 800-456-1697 or 814-455-1697 www.reedmfgco.com 111-518350 M...

lang:en score:29 filesize: 3.94 M page_count: 8 document date: 2011-01-07

[pdf] User Manual

58350 DM3MECH ENG SP 08 20 reedmfgco assets 308 03 80 and DM3MECHBSPT Mechanical Hot Tapping Machine Operator s Manual y del operador de la máqu 3 Operator·s Operation NOT using a flanged valve Verify all equipment is in good condition Use only fittings nipples valves pressure rated for the job De Pdf EFT International Free |||

Mechanical Hot Tapping Machine Operator s Manual Shown Equipo Mostrado **DM3MECH** #08350 **DM3MECH** and **DM3MECH**BSPT Mechanical Hot Tapping Machine Operator s Manual **DM3MECH** y **DM3MECH**BSPT Manual del operador de la mquina para perforacin mecnica en tubera cargada tapping REED MANUFACTURING 1425 West...

lang:en score:28 filesize: 1.05 M page_count: 12 document date: 2020-08-19

LIFETIME WARRANTY

Reed Lifetime Warranty

Reed Hand Tools are for the professional trade and are warranted against all failure due to defects in workmanship and materials for the normal life of the tool.

FAILURES DUE TO MISUSE, ABUSE, OR NORMAL WEAR AND TEAR ARE NOT COVERED BY THIS WARRANTY.

Power units for Universal Pipe Cutters, Saw 119, electric tool pumps, and threading power drives are warranted for a period of one year from date purchased.

NO PARTY IS AUTHORIZED TO EXTEND ANY OTHER WARRANTY. NO WARRANTY FOR MERCHANTABILITY OR FITNESS FOR A PARTICULAR PURPOSE SHALL APPLY.

No warranty claims will be allowed unless the product in question is received freight prepaid at the Reed factory. All warranty claims are limited to repair or replacement, at the option of the company, at no charge to the customer. REED IS NOT LIABLE FOR ANY DAMAGE OF ANY SORT, INCLUDING INCIDENTAL AND CONSEQUENTIAL DAMAGES. Some states do not allow the exclusion or limitation of incidental or consequential damages, so the above exclusion may not apply.

This warranty gives you specific legal rights, and you may also have other rights which vary from state to state.

REED
PIPE TOOLS & VISES
SINCE 1896

REED MANUFACTURING COMPANY

1425 West Eighth St. Erie, PA 16502 USA Phone: 800-666-3691 or 814-452-3691 Fax: 800-456-1697 or 814-455-1697

www.reedmfgco.com

812-08350

[pdf] User Manual Warranty

C Documents and Settings Ema 78 58350 dm3mech instr 1 Email User Mechanical Hot Tapping Machine Operator 39 s Manual Reed Figure 4 20 Screw the assembly onto Branch Valve Ensure marks line up Close Bleed off open 21 Push shaft forward until retainer snaps through pilot hole 22 Resume drilling Use moderate pressure Lifetime Warranty Hand Tools are for professional trade warranted against all failure due to defects in workmanship materials normal life of tool FAILURES DUE TO MISUSE ABUSE OR NORMAL WEAR AND TEAR ARE NOT COVERED BY THIS WARRANTY manual v 8a6073d586797b7eaa85c19d74e4315cf1bb154d d347awuzx0kdse cloudfront net edroaws product plumboss

Mechanical Hot Tapping Machine Operator s Manual Reed Lifetime Warranty Reed Hand Tools are for th ... nd PVC Maximum Pressure: Chilled water and hot water systems: 300psi Steam: 125 psi Do not use **DM3MECH** on ammonia or any other caustic systems. Accessories Required but not supplied 1. Correc...

lang:en score:28 filesize: 1.83 M page_count: 8 document date: 2010-10-05

REED
PIPE TOOLS & VISES
SINCE 1896

DM3MECH
MECHANICAL HOT
TAPPING MACHINE

#08350

With Reed Mechanical Hot Tapping Machines, tap a new line into copper, steel or plastic pipe for up to 4" valves while under pressure—up to 300 psi for hot or cold water, 125 psi for steam. Both DM3MECH and DM3MECHB come with a plastic, compartmental toolbox. They require a 1/2" drill motor, valves and fittings that are each sold separately.

#08350 DM3MECH
KIT WITH HOLE SAWS

#08351 DM3MECHB
KIT WITHOUT HOLE SAWS

REED MANUFACTURING COMPANY
1425 W. 8th Street Erie, PA 16502
Phone: 800-666-3691 or 814-452-3691
Fax: 800-456-1697 or 814-455-1697
www.reedmfgco.com

412 - 01131

[pdf] Decleration of Conformity Flyer

Microsoft Word 01131 DM3MECH flyer doc mcaldwell reedmfgco assets 911 With Reed Mechanical Hot Tapping Machines tap a new line into copper steel or plastic pipe for up to 4 valves while under pressure —up 300 psi hot |||

DM3MECH Mechanical Hot Tapping Machine #08350 With Reed Mechanical Hot Tapping Machines, tap a new line into copper, steel or plastic pipe for up to 4 valves while under pressure--up to 300 psi for hot or cold water, 125 psi for steam. Both **DM3MECH** and **DM3MECH**B come with a plastic, compartmental ...

lang:en score:26 filesize: 130.92 K page_count: 1 document date: 2012-04-30

REED
PIPE TOOLS & VISES
SINCE 1896

Shown: DM3MECH 08350

DM3MECH
Mechanical Hot Tapping Machine Operator's Manual

REED MANUFACTURING COMPANY

1425 West Eighth St. Erie, PA 16502 USA Phone: 800-666-3691 or 814-452-3691 Fax: 800-456-1697 or 814-455-1697

www.reedmfgco.com

1212-08350

[pdf] User Manual

58350 DM3MECH reedmfgco 80 assets 308

Mechanical Hot Tapping Machine Operator s Manual Shown: **DM3MECH** 08350 **DM3MECH** Mechanical Hot Tapping Machine Operator s Manual REED MANUFACTURING COMPANY 1425 West Eighth St. Erie, PA 16502 USA Phone: 800-666-3691 or 814-452-3691 Fax: 800-456-1697 or 814-455-1697 www.reedmfgco.com 1212-158350 ...

lang:en score:26 filesize: 1.51 M page_count: 8 document date: 2012-12-28

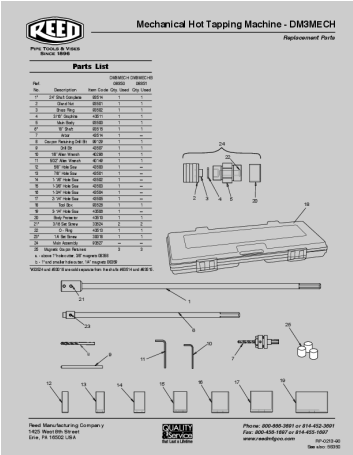

[pdf] Parts List

90 DM3MECH reedmfgco 80 assets 642

Mechanical Hot Tapping Machine - **DM3MECH** Replacement Parts Parts List **DM3MECH DM3MECH**B Ref. 08350 08351 No. Description Item Code Qty. Used Qty. Used 1* 24 Shaft Complete 93514 1 1 2 Gland Nut 93501 1 1 3 Brass Ring 93502 1 1 4 3/16 Graphite 43511 1 1 5 Main Body 9350...

lang:en score:26 filesize: 225.11 K page_count: 1 document date: 2013-02-12

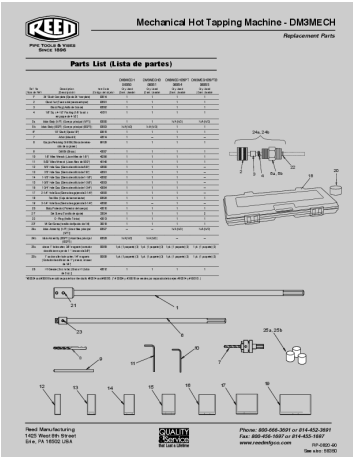

[pdf] Parts List

90 DM3MECH reedmfgco 80 assets 642

Mechanical Hot Tapping Machine - **DM3MECH** Replacement Parts Parts List Lista de partes Ref. No Nm de Ref Description Descripcin Item Code Cdigo del objeto **DM3MECH** 08350 Qty. Used Cant. Usada **DM3MECH**B 08351 Qty. Used Cant. Usada **DM3MECH**BSPT **DM3MECH**BSPTB 08354 08355 Qty. Used Can...

lang:es score:25 filesize: 297.21 K page_count: 1 document date: 2020-08-20

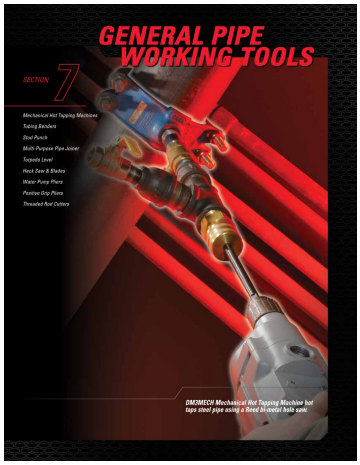

[pdf] Catalog

Section 7 General Pipe Working Tools N reedmfgco assets 3624 Раздел Общие инструменты для обработки труб GenerAl PiPe worKinG tools REED РИИД инструмент Купить в Москве по низким ценам 79 Features hot tap up to 4 valves on steel copper or plastic pipe Pressure rated 300 psi for ambient temperatures 125 steam systems Hot using the Dm3meCh Mechanical Tapping Machine With right hole saw drill and cut into videos |||

General pipe working tools SECTION Mechanical Hot Tapping Machines Tubing Benders Stud Punch Multi-Purpose Pipe Joiner Torpedo Level Hack Saw Blades Water Pump Pliers Positive Grip Pliers Threaded Rod Cutters **DM3MECH** Mechanical Hot Tapping Machine hot taps steel pipe using a Reed bi-metal hole saw...

lang:en score:24 filesize: 542.97 K page_count: 5 document date: 2017-09-24

[pdf] Catalog

Reed Catalog Section 7 General Pipe Working Tools N tisales 2021 08 |||

General pipe working tools SECTION Mechanical Hot Tapping Machines Tubing Benders Stud Punch Multi-Purpose Pipe Joiner Torpedo Level Hack Saw Blades Water Pump Pliers Positive Grip Pliers Threaded Rod Cutters **DM3MECH** Mechanical Hot Tapping Machine hot taps steel pipe using a Reed bi-metal hole saw...

lang:en score:21 filesize: 654 K page_count: 5 document date: 2017-09-24

[pdf] Specifications

Reed Hand Tools Specifications hand tools screwdrivers pliers wrenches hammers ratchets sockets saws chisels tool sets cutters TOOLSiD 08350 specifications images carid reed items |||

DM3MECH Mechanical Hot Tapping Machine #08350 With Reed Mechanical Hot Tapping Machines, tap a new line into copper, steel or plastic pipe for up to 4 valves while under pressure--up to 300 psi for hot or cold water, 125 psi for steam. Both **DM3MECH** and **DM3MECH**B come with a plastic, compartmental ...

lang:af score:21 filesize: 167.59 K page_count: 1 document date: 2021-08-17

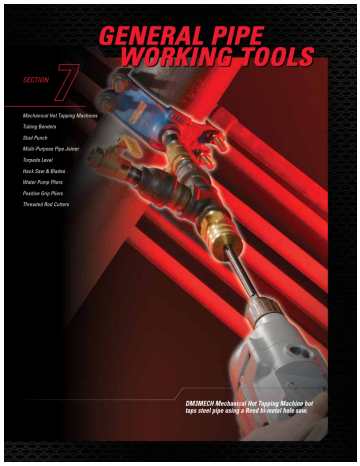

[pdf] Datasheet Catalog

Download Datasheet 3624 Section 7 General Pipe Working Tools N Reed Catalog 609fb49d686d81e2133802d49cd5e74e datasheet datasheetarchive originals crawler reedmfgco |||

General pipe working tools SECTION Mechanical Hot Tapping Machines Tubing Benders Stud Punch Multi-Purpose Pipe Joiner Torpedo Level Hack Saw Blades Water Pump Pliers Positive Grip Pliers Threaded Rod Cutters **DM3MECH** Mechanical Hot Tapping Machine hot taps steel pipe using a Reed bi-metal hole saw...

lang:en score:21 filesize: 1004.16 K page_count: 6 document date: 2015-07-07

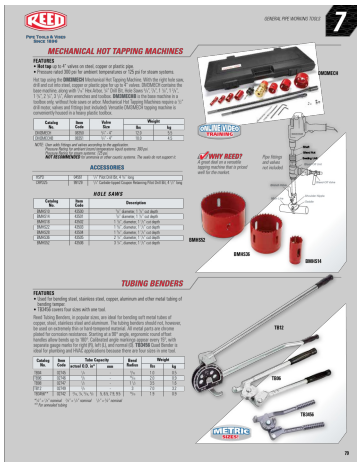

[pdf] Specifications Accessories Catalog

SPECIFICATION 3 4 in Hot Tapping Machine REED Ferguson 2924342 7426240 specification fergusonprod a bigcontent io v1 static |||

GENERAL PIPE WORKING TOOLS 7 Mechanical Hot Tapping Machines FEATURES Hot tap up to 4 valves on steel, copper or plastic pipe. Pressure rated 300 psi for ambient temperatures or 125 psi for steam systems. Hot tap using the **DM3MECH** Mechanical Hot Tapping Machine. With the right hole saw, drill ...

lang:en score:20 filesize: 155.76 K page_count: 1 document date: 2020-10-22

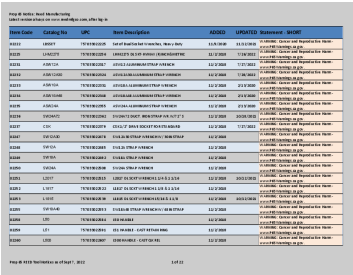

[pdf] Catalog

Prop 65 Tool Notices DIST SEPT072022 data for xlsx mcaldwell REED DISTRIBUTOR SEPT 2022 â California Reed Manufacturing reedmfgco assets 6029 |||

Prop 65 Notice: Reed Manufacturing Latest version always on www.reedmfgco.com, after log-in Item Co ... 09163 09164 EHTPOUTHOSE EHTP500C EHTP500CE DPHTP500 DPHTP500E CSO1R CSO2R CSR2 RCR3/4 RCR1 RCR341 **DM3MECH** **DM3MECH**B **DM3MECH**BSPT **DM3MECH**BSPTB DMHSA FTB FT2000CC110 FT2000 FT2000110 FT2000NPT 75703308...

lang:en score:20 filesize: 204.19 K page_count: 22 document date: 2022-09-12

[pdf] Catalog

Раздел 7 Общие инструменты для обработки труб NREED РИИД инструмент Купить REED в Москве по низким ценамSection General Pipe Working Tools Nreedmfgco assets 3624 Section N |||

General pipe working tools SECTION Mechanical Hot Tapping Machines Tubing Benders Stud Punch Multi-Purpose Pipe Joiner Torpedo Level Hack Saw Blades Water Pump Pliers Positive Grip Pliers Threaded Rod Cutters **DM3MECH** Mechanical Hot Tapping Machine hot taps steel pipe using a Reed bi-metal hole saw...

lang:en score:20 filesize: 1.06 M page_count: 5 document date: 2017-09-24

[pdf] Catalog

Section 8 General Pipe Working Tools O REED Catalog Reed Manufacturing v2 reedmfgco assets 6654 |||

SECTION 1 / PLASTIC PIPE TOOLS SECTION 8 GENERAL PIPE WORKING TOOLS Pump Stick Mechanical Hot Tappi ... rcial and industrial applications. Catalog No. Item Code Description Weight Valve Size lbs kg **DM3MECH** 08350 Kit for NPT with hole saws and arbor in storage case 3/4 - 4 12.0 5.5 **DM3MECH**...

lang:en score:20 filesize: 5.9 M page_count: 6 document date: 2023-01-04

[pdf] Catalog

Section 8 General Pipe Working Tools O REED Catalog Reed Manufacturing reedmfgco assets 6654 |||

SECTION 1 / PLASTIC PIPE TOOLS SECTION 8 GENERAL PIPE WORKING TOOLS Pump Stick Mechanical Hot Tappi ... rcial and industrial applications. Catalog No. Item Code Description Weight Valve Size lbs kg **DM3MECH** 08350 Kit for NPT with hole saws and arbor in storage case 3/4 - 4 12.0 5.5 **DM3MECH**...

lang:en score:20 filesize: 5.9 M page_count: 6 document date: 2023-02-09

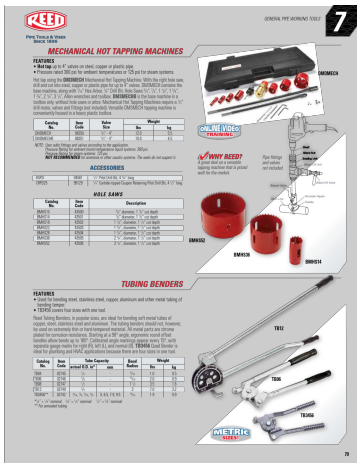

[pdf] Specifications Accessories Catalog

Specification REED 3 4 in Copper Tubing Bender 02749 Pollardwater Query ASSET ID 6484176 USE TYPE SPECIFICATION PRODUCT 3602131 api ferguson dar step service |||

GENERAL PIPE WORKING TOOLS 7 Mechanical Hot Tapping Machines FEATURES Hot tap up to 4 valves on steel, copper or plastic pipe. Pressure rated 300 psi for ambient temperatures or 125 psi for steam systems. Hot tap using the **DM3MECH** Mechanical Hot Tapping Machine. With the right hole saw, drill ...

lang:en score:20 filesize: 154.87 K page_count: 1 document date: 2020-05-23

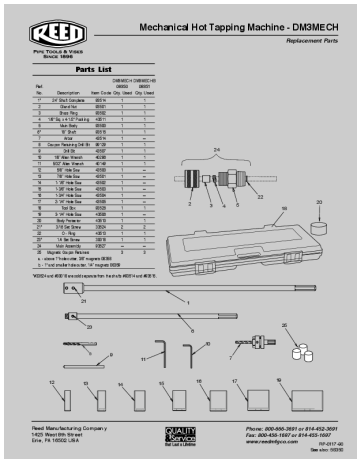

[pdf] Parts List

PARTS REED Tapping Machine Ferguson 3602279 2966039 parts fergusonprod a bigcontent io v1 static |||

Mechanical Hot Tapping Machine - **DM3MECH** Replacement Parts Parts List **DM3MECH DM3MECH**B Ref. 08350 08351 No. Description Item Code Qty. Used Qty. Used 1* 24 Shaft Complete 93514 1 1 2 Gland Nut 93501 1 1 3 Brass Ring 93502 1 1 4 1/8 Sq. x 4-1/2 Packing 43511 1 1 5 Main B...

lang:en score:20 filesize: 231.15 K page_count: 1 document date: 2017-01-17

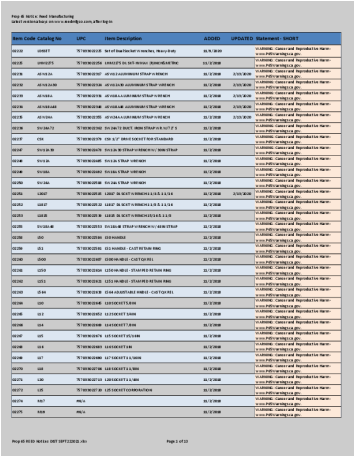

[pdf] Catalog

Prop 65 REED Notices DIST SEPT222021 xlsx mcaldwell Item Code Catalog No UPC Description ADDED UPDATED Notice Reed Manufacturing Latest version always on reedmfgco after log-in Statement - SHORT 02222 LDSSET 757033022225 Set of Dual Socket Wrenches Heavy-Duty 11 9 2020 assets 6029 JUN072021 |||

Prop 65 Notice: Reed Manufacturing Latest version always on www.reedmfgco.com, after log-in Item Co ... ROUNDER, 1 COPPER 8/18/2020 RCR341 757033082281 RCR341 ROUND-IT 3/4 TOOL AND 1 JA 8/18/2020 **DM3MECH** 757033083509 **DM3MECH** 7/1/2018 **DM3MECH**B 757033083516 **DM3MECH** Base 7/1/2018 **DM3MECH**BSPT ...

lang:i-klingon score:20 filesize: 149.82 K page_count: 13 document date: 2021-09-22

[pdf] Price List

AD ESD HOT SHEET indd mcaldwell reedmfgco WHY REED Reed is the lowest total cost and most profi table pipe tool vise supplier to electrical distributors $600 prepaid freight Ship 95% complete orders within 24 hours commitments investments for No 5% drop ship penalty standard pack order minimum 30% discount from list on all tools parts 2 15 assets 4049 Go Now Reedmfgco View real estate rentals apartment rent Url |||

A-D ESD HOT SHEET Of Reed s Special Offers WHY REED Reed is the lowest total cost and most profita ... make jobs easier. The series features several cutters, PE Scraper, Bevelers, Saw It Pneumatic Saws, **DM3MECH** Hot Tapping Machine, Test Pumps, 5401 Power Threading Machines, Power Drives, Tapping Dril...

lang:en score:19 filesize: 161.52 K page_count: 2 document date: 2015-02-02

[pdf] User Manual Specifications Flyer Catalog

Double Deep 01191 Fire Protection flyer 03 24 REED reedmfgco assets 6303 |||

Fire Protection Tools Roll Groovers Perform both power and manual grooves with ease. And since they ... for steam systems. Eliminates the need to shut down, drain, cut, refit and refill pipingsystems. **DM3MECH** Ridgid is a registered trademark of Ridgid, Inc. and is not associated with Reed Manufactur...

lang:en score:19 filesize: 2.81 M page_count: 2 document date: 2024-03-28

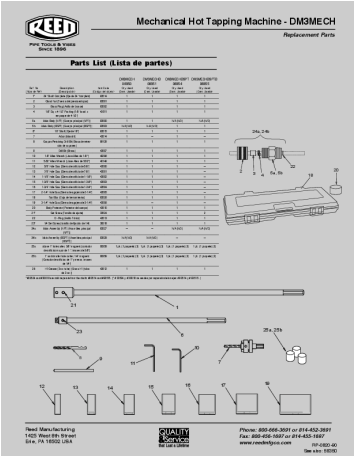

[pdf] Parts List

PARTS 3 4 in Hot Tapping Machine REED Ferguson 2924342 7424827 parts fergusonprod a bigcontent io v1 static |||

Mechanical Hot Tapping Machine - **DM3MECH** Replacement Parts Parts List Lista de partes Ref. No Nm de Ref Description Descripcin Item Code Cdigo del objeto **DM3MECH** 08350 Qty. Used Cant. Usada **DM3MECH**B 08351 Qty. Used Cant. Usada **DM3MECH**BSPT **DM3MECH**BSPTB 08354 08355 Qty. Used Can...

lang:es score:19 filesize: 294.88 K page_count: 1 document date: 2020-10-07

[pdf] Catalog

REED 2018 Russian Catalog reedmfgco assets 4139 Reed catalog 2015

N / , , // . . . 1 - 1896 . - Carl Reed , Reed. 1 ... 18 457 13 330 4.4 2.0 HWFR HWFR 91 **DM3MECH** , REED. 92 7 4 , . 20 8 . D...

lang:de score:18 filesize: 21 M page_count: 108 document date: 2019-03-20

[pdf]

Seccion 8 Herramientas generales para tuberias CatÃ¡logo en espaÃ±ol Reed Manufacturing reedmfgco assets 6713 |||

SECCIN 1 / HERRAMIENTAS PARA TUBOS PLSTICOS SECCIN 8 HERRAMIENTAS GENERALES PARA TUBERAS Pump Stick ... les e industriales. N de Catlogo Cdigo de artculo Descripcin Tamao de Peso la vlvula lbs kg **DM3MECH** 08350 Kit para NPT con sierras de corona y rbol en maletn 3/4 - 4 12,0 5,5 **DM3MECH**B ...

lang:es score:18 filesize: 23.96 M page_count: 6 document date: 2023-06-13

[pdf] Catalog

Reed Russian catalog 2015 reedmfgco assets Catalog Languages

Catalog / / / / , , / / / . . . 1 . 1896 . Carl Reed , ... HWFR 02397 1 3/4 42 1 1/4 32 18 457 13 330 4.4 2.0 94 **DM3MECH** , REED. 95 7 www.reedmfgco.com **DM3MECH** . BMHS52 BMHS...

lang:de score:18 filesize: 17.59 M page_count: 102 document date: 2015-03-30

[pdf] User Manual Specifications Flyer Catalog

Fire Protection Tools reedmfgco 0821 01191 Reed Manufacturing Erie PA USA Tripod Pipe Vises Roll Groovers From our classic R450 to the larger R470 — and a number of specialty models has right solution flyer 8 21 assets 6303 5 |||

Fire Protection Tools Tripod Pipe Vises From our classic R450 to the larger R470 Tripod-- and a n ... for steam systems. Eliminates the need to shut down, drain, cut, refit and refill pipingsystems. **DM3MECH** Threading Power Drive Units ship with with HSS High Speed Steel Universal Dies versus th...

lang:en score:17 filesize: 1.83 M page_count: 2 document date: 2021-08-26

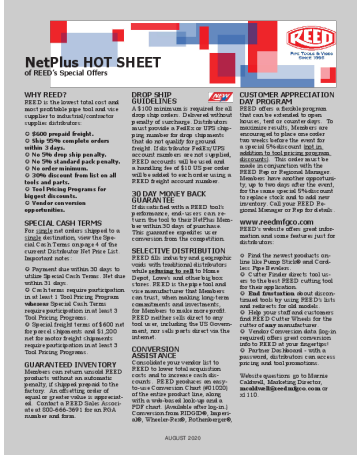

[pdf] Price List

NetPlus HOT SHEET indd mcaldwell reedmfgco WHY REED is the lowest total cost and most profi table pipe tool vise supplier to industrial contractor supplies distributors $600 prepaid freight Ship 95% complete orders within 3 days 8 20 assets 4051 5 15 |||

NetPlus HOT SHEET of REED s Special Offers WHY REED REED is the lowest total cost and most profita ... ff Tools Plastic Pipe Joiners Power Drives Roll Groovers Saw ItPneumatic Saw Universal Pipe Cutters **DM3MECH** Hot Tapping Machines PLAS In-Line RotaryCutters 5401TMSO Threading Machine CO-OP PROGRAM For...

lang:en score:17 filesize: 183.73 K page_count: 2 document date: 2020-07-30

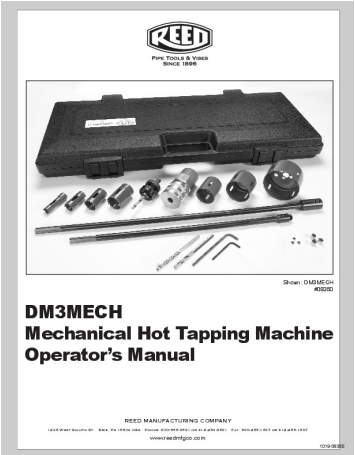

[pdf] User Manual

Ferguson Query ASSET ID 5770307 USE TYPE AND CARE PRODUCT 2924342 api ferguson dar step service |||

Mechanical Hot Tapping Machine Operator s Manual Shown: **DM3MECH** #08350 **DM3MECH** Mechanical Hot Tapping Machine Operator s Manual REED MANUFACTURING COMPANY 1425 West Eighth St. Erie, PA 16502 USA Phone: 800-666-3691 or 814-452-3691 Fax: 800-456-1697 or 814-455-1697 www.reedmfgco.com 1019-158350 ...

lang:en score:16 filesize: 1.92 M page_count: 8 document date: 2019-10-25

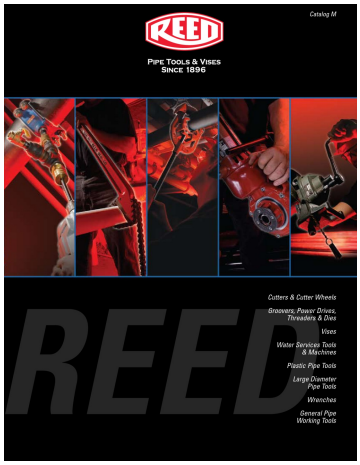

[pdf] Catalog

Catalog Reed 04426 REED04426 southernpipe ASSETS DOCUMENTS CMS EN |||

Catalog M Cutters Cutter Wheels Groovers, Power Drives, Threaders Dies Vises Water Services Tool ... 72 7 Hole Master Hole Cutting Base..... 72 Hole Saws for **DM3MECH** Hole Master..... 72 Self-Feed Bits .....

lang:en score:16 filesize: 26.07 M page_count: 80 document date: 2009-03-04

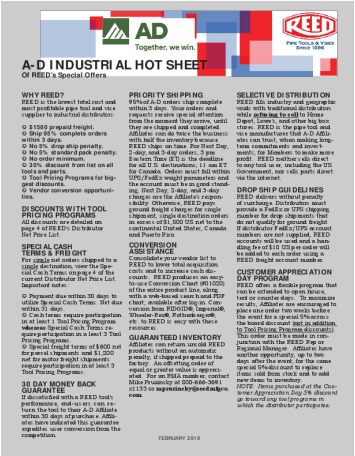

[pdf] Price List

AD Industrial HOT SHEET indd mcaldwell reedmfgco WHY REED is the lowest total cost and most profi table pipe tool vise supplier to industrial distributors $1500 prepaid freight Ship 95% complete orders within 3 days No 5% drop ship penalty standard pack order minimum 30% discount from list on all tools parts 2 19 assets 4056 ISD 15 |||

A-D INDUSTRIAL HOT SHEET Of REED s Special Offers WHY REED REED is the lowest total cost and most ... ff Tools Plastic Pipe Joiners Power Drives Roll Groovers Saw ItPneumatic Saw Universal Pipe Cutters **DM3MECH** Hot Tapping Machines PLAS In-Line Rotary Cutters 5401TMSO Threading Machine FEBRUARY 2019 M...

lang:en score:16 filesize: 131.48 K page_count: 2 document date: 2019-02-25

[pdf]

Seccion 7 reedmfgco assets 3905 |||

Herramientas para trabajos SECCIN generales en tuberas Maquinas para perforaciones en tubera car ... temperaturas ambiente o 125 psi para sistemas de vapor. Aterraje tuberas cargadas usando la mquina **DM3MECH**. Con la sierra perforadora adecuada, perfore o corte tubo de acero, cobre o plstico para vlv...

lang:es score:16 filesize: 935.03 K page_count: 5 document date: 2014-11-19

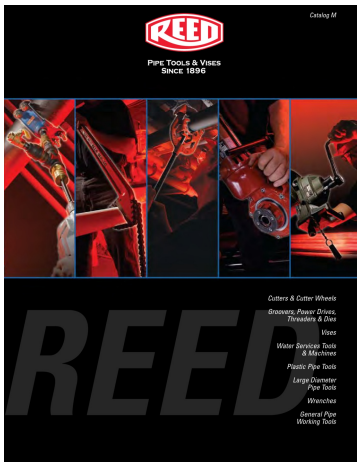

[pdf] Catalog

Reed 04174 Plumbers Supply Co UNI PS22727 Cat plumbers supply co ASSETS DOCUMENTS ITEMS EN |||

Catalog M Cutters Cutter Wheels Groovers, Power Drives, Threaders Dies Vises Water Services Tool ... 72 7 Hole Master Hole Cutting Base..... 72 Hole Saws for **DM3MECH** Hole Master..... 72 Self-Feed Bits .....

lang:en score:16 filesize: 25.19 M page_count: 80 document date: 2017-06-29

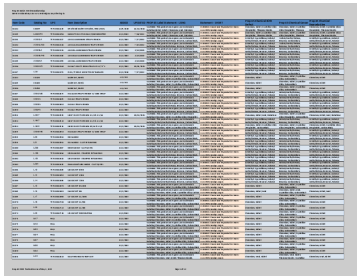

[pdf] Catalog

Prop 65 Tool Notices DIST MAY 9 2025 xlsx mcaldwell Reed ManufacturingBH18C N A 10 23 2018 WARNING This product can expose you to chemicals including Cobalt Metal Powder which are known the WARNING reedmfgco assets 6029 |||

Prop 65 Notice: Reed Manufacturing Latest version always on www.reedmfgco.com, after log-in Item Co ... ROUNDER, 1 COPPER 8/18/2020 RCR341 757033082281 RCR341 ROUND-IT 3/4 TOOL AND 1 JA 8/18/2020 **DM3MECH** 757033083509 **DM3MECH** 7/1/2018 **DM3MECH**B 757033083516 **DM3MECH** Base 7/1/2018 **DM3MECH**BSPT 7...

lang:i-klingon score:16 filesize: 498.92 K page_count: 12 document date: 2025-06-30

[pdf] Catalog

2017 REED Catalog N web FINAL reedmfgco assets 4201 2015 Full Reed

Catalog N Cutters Cutter Wheels / Large Diameter Pipe Tools / Plastic Pipe Tools / Water Service ... Joiner Torpedo Level Hack Saw Blades Water Pump Pliers Positive Grip Pliers Threaded Rod Cutters **DM3MECH** Mechanical Hot Tapping Machine hot taps steel pipe using a Reed bi-metal hole saw. 78 GENE...

lang:en score:16 filesize: 11.71 M page_count: 92 document date: 2017-09-20

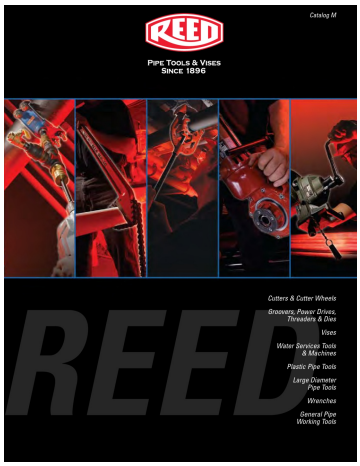

[pdf] Specifications Catalog

Specification REED 12 PVC Pipe SAW Blade ONLY 94512 Pollardwater Query ASSET ID 5037996 USE TYPE SPECIFICATION PRODUCT 72231 api ferguson dar step service |||

Catalog M Cutters Cutter Wheels Groovers, Power Drives, Threaders Dies Vises Water Services Tool ... 72 7 Hole Master Hole Cutting Base..... 72 Hole Saws for **DM3MECH** Hole Master..... 72 Self-Feed Bits .....

lang:en score:15 filesize: 25.23 M page_count: 80 document date: 2016-06-28

[pdf] Catalog

2017 Полный каталог Reed NREED РИИД инструмент Купить REED в Москве по низким ценам2017 Catalog N web FINALreedmfgco assets 4201 FINAL |||

Catalog N Cutters Cutter Wheels / Large Diameter Pipe Tools / Plastic Pipe Tools / Water Service ... Joiner Torpedo Level Hack Saw Blades Water Pump Pliers Positive Grip Pliers Threaded Rod Cutters **DM3MECH** Mechanical Hot Tapping Machine hot taps steel pipe using a Reed bi-metal hole saw. 78 GENE...

lang:en score:15 filesize: 23.43 M page_count: 92 document date: 2017-09-20

[pdf] Catalog

Catalog Reed 04510 REED04510 1 southernpipe ASSETS DOCUMENTS CMS EN |||

Catalog N CUTTERS CUTTER WHEELS / LARGE DIAMETER PIPE TOOLS / PLASTIC PIPE TOOLS / WATER SERVICES ... Joiner Torpedo Level Hack Saw Blades Water Pump Pliers Positive Grip Pliers Threaded Rod Cutters **DM3MECH** Mechanical Hot Tapping Machine hot taps steel pipe using a Reed bi-metal hole saw. 78 GENE...

lang:en score:15 filesize: 16.19 M page_count: 84 document date: 2015-01-23

[pdf] Catalog

Reed Catalog FULL 2017 tisales 2021 08 |||

Catalog N Cutters Cutter Wheels / Large Diameter Pipe Tools / Plastic Pipe Tools / Water Service ... Joiner Torpedo Level Hack Saw Blades Water Pump Pliers Positive Grip Pliers Threaded Rod Cutters **DM3MECH** Mechanical Hot Tapping Machine hot taps steel pipe using a Reed bi-metal hole saw. 78 GENE...

lang:en score:15 filesize: 11.94 M page_count: 92 document date: 2021-07-22

[pdf] Catalog

Reed 02080 Turtle Hughes 43500 Catalog turtle ASSETS DOCUMENTS ITEMS EN |||

Catalog N Cutters Cutter Wheels / Large Diameter Pipe Tools / Plastic Pipe Tools / Water Services ... Joiner Torpedo Level Hack Saw Blades Water Pump Pliers Positive Grip Pliers Threaded Rod Cutters **DM3MECH** Mechanical Hot Tapping Machine hot taps steel pipe using a Reed bi-metal hole saw. 78 GENE...

lang:en score:15 filesize: 24.24 M page_count: 84 document date: 2015-07-07

[pdf] Catalog

01111 REED 0304 Catalog Chinese 2020 v12 reedmfgco assets 4208 N 2015 Reed China final July Languages Dec 22 — videos |||

www.reedmfgco.com/cn /// /// Catalog N 1 1896 1902 1849 ---- ... 414 08080 4 - 14 102 - 355 PVC 25 34.0 15.5 PJ414 4 300 psi 15 psi REED **DM3MECH** 3/4 4 300 psi 125 psi **DM3MECH** 1 1/4 NPT 1/2 **DM3MECH**BSPT 1 1/4 BSPT 1/...

lang:i-klingon score:15 filesize: 15.87 M page_count: 52 document date: 2020-12-18

[pdf]

Katalog N v ÄeÅ¡tinÄ REED ÐÐ°ÑÐ°Ð»Ð¾Ð³ Reed Manufacturing Cat Czech 2016 reedmfgco assets 4680 |||

Katalog N www.reed.cz EZKY A EZAC KOLECKA / NSTROJE NA TRUBKY VELKHO PRMRU / NSTROJE NA PLASTOV TRUB ... dn cerpadla Klest s pevnm drzenm Nzky na zvitov tyce Mechanick nstroj pro navrtvn potrub pod tlakem **DM3MECH** navrtv pod tlakem ocelov potrub pomoc bimetalov drovky Reed. 78 UNIVERZLN NSTROJE NA ZPRAC...

lang:de score:15 filesize: 23.43 M page_count: 84 document date: 2016-08-30

[pdf] Catalog

FIRST CHOICE PSC Distribution U Perfect for supporting work during cutting operations using Reed Hinged Cutters 18 5 8 4 ARWO14 02202 1 2 14 61 350 9 0 ARWO18 2015 full reed catalog n pscia ASSETS DOCUMENTS ITEMS EN |||

Catalog N CUTTERS CUTTER WHEELS / LARGE DIAMETER PIPE TOOLS / PLASTIC PIPE TOOLS / WATER SERVICES ... Joiner Torpedo Level Hack Saw Blades Water Pump Pliers Positive Grip Pliers Threaded Rod Cutters **DM3MECH** Mechanical Hot Tapping Machine hot taps steel pipe using a Reed bi-metal hole saw. 78 GENE...

lang:en score:14 filesize: 17.18 M page_count: 84 document date: 2016-03-15

[pdf] Specifications Catalog

SPECIFICATION REED 24 TEETH Hacksaw Blade Ferguson 1763310 7317904 specification fergusonprod a bigcontent io v1 static |||

Catalog N Cutters Cutter Wheels / Large Diameter Pipe Tools / Plastic Pipe Tools / Water Service ... Joiner Torpedo Level Hack Saw Blades Water Pump Pliers Positive Grip Pliers Threaded Rod Cutters **DM3MECH** Mechanical Hot Tapping Machine hot taps steel pipe using a Reed bi-metal hole saw. 78 GENE...

lang:en score:14 filesize: 11.53 M page_count: 92 document date: 2020-11-19

[pdf] Guide Catalog

*2023 Full REED Catalog O Reed Manufacturing reedmfgco assets 6659 2023 |||

www.reedmfgco.com CUTTERS CUTTER WHEELS / PLASTIC PIPE TOOLS / WATER SERVICES TOOLS / THREADERS ... rcial and industrial applications. Catalog No. Item Code Description Weight Valve Size lbs kg **DM3MECH** 08350 Kit for NPT with hole saws and arbor in storage case 3/4 - 4 12.0 5.5 **DM3MECH**...

lang:en score:13 filesize: 40.06 M page_count: 92 document date: 2023-04-03

[pdf] Guide Catalog

*2023 Full REED Catalog O Reed Manufacturing 2023 v2 reedmfgco assets 6659 |||

www.reedmfgco.com CUTTERS CUTTER WHEELS / PLASTIC PIPE TOOLS / WATER SERVICES TOOLS / THREADERS ... rcial and industrial applications. Catalog No. Item Code Description Weight Valve Size lbs kg **DM3MECH** 08350 Kit for NPT with hole saws and arbor in storage case 3/4 - 4 12.0 5.5 **DM3MECH**...

lang:en score:13 filesize: 40.04 M page_count: 92 document date: 2023-01-04

[pdf] Guide Catalog

*2023 Full REED Catalog O Reed Manufacturing videos reedmfgco assets 6659 2023 |||

www.reedmfgco.com CUTTERS CUTTER WHEELS / PLASTIC PIPE TOOLS / WATER SERVICES TOOLS / THREADERS ... rcial and industrial applications. Catalog No. Item Code Description Weight Valve Size lbs kg **DM3MECH** 08350 Kit for NPT with hole saws and arbor in storage case 3/4 - 4 12.0 5.5 **DM3MECH**...

lang:en score:13 filesize: 50.66 M page_count: 92 document date: 2023-06-19