Saved from manuals.plus.
Open the live page for links to other documents and user manuals.

Panasonic KX-PDP2

Panasonic KX-PDP2 Developer Unit Instruction Manual

For use with Panasonic KX-P4420 Laser Printer

Introduction

This manual provides essential instructions for the safe and effective installation and use of your Panasonic KX-PDP2 Developer Unit. Please read this manual thoroughly before proceeding with installation to ensure proper function and to prevent damage to the unit or your printer. The Panasonic KX-PDP2 is designed specifically for the Panasonic KX-P4420 laser printer.

Safety Information

Please read the entire instructions before proceeding.

Important:

- The developer unit contains developer for printing.
- Keep the developer unit away from dust and small objects.
- Do not place the developer unit in an area with high temperature or humidity area, and keep it out of direct sunlight.
- Be careful not to spill the developer powder.
- Be sure not to touch the exposed developer, for it will make your hands dirty.

Package Contents

Verify that your package contains the following items:

- 1 x Panasonic KX-PDP2 Developer Unit
- Instruction Sheet



Image: Panasonic KX-PDP2 Developer Unit in its sealed plastic packaging, as received.

Setup and Installation

Follow these steps carefully to install the developer unit into your Panasonic KX-P4420 printer.

1. **Turn the power off.** Ensure the printer is completely powered down before proceeding.
2. **Push the clamshell release button and open the printer.**This will expose the internal components where the developer unit is installed.

Panasonic

Developer Unit
KX-PDP2
for use with the KX-P4420

Caution:
Please read the entire instructions before proceeding.

Carton Content
Developer unit 1

Installation Instructions

Important:
The developer unit contains developer for printing.
- Keep the developer unit away from dust and small objects.
- Do not place the developer unit in an area with high temperature or humidity area, and keep it out of direct sunlight.
- Be careful not to spill the developer powder.
- Be sure not to touch the exposed developer, for it will make your hands dirty.

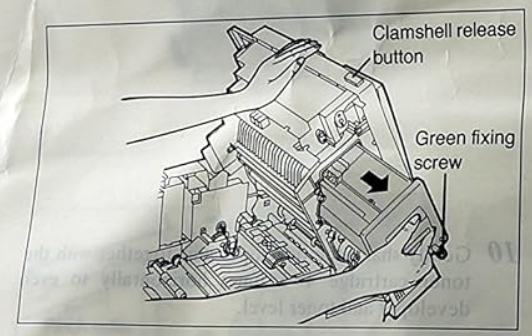

1 Turn the power off.

2 Push the clamshell release button and open the printer.

3 Loosen the green fixing screw and remove the used developer unit together with the toner cartridge.

4 Close the printer so that the drum unit isn't exposed to light.

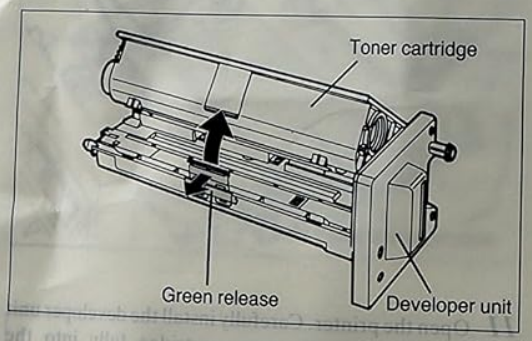

5 Tap the top of the toner cartridge gently to avoid spilling the toner.

6 Remove the toner cartridge from the used developer unit by pressing the green release and gently pulling the two units apart.

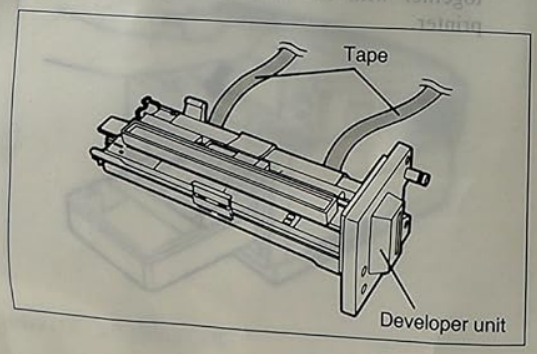

7 Open the protective bag and remove the new developer unit. Carefully remove the tape holding the two plastic seals in place.

– 1 –

Image: Step 2 - Locating the clamshell release button and opening the printer's front cover, as shown in the instruction sheet.

3. **Loosen the green fixing screw and remove the used developer unit together with the toner cartridge.**
   Carefully pull out the old unit.

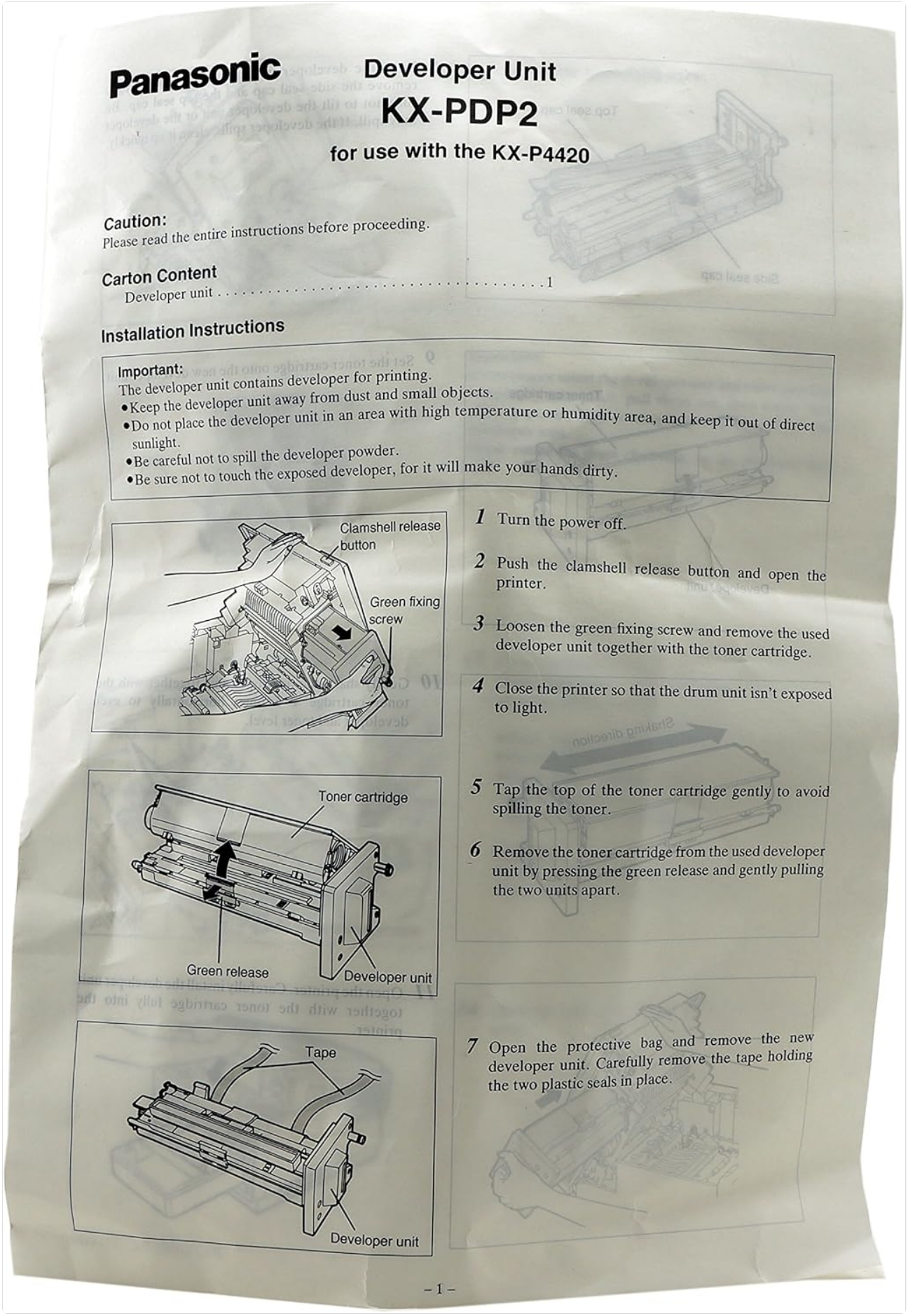

Panasonic

Developer Unit

KX-PDP2

for use with the KX-P4420

Caution:
Please read the entire instructions before proceeding.

Carton Content
Developer unit 1

Installation Instructions

Important:
The developer unit contains developer for printing.
- Keep the developer unit away from dust and small objects.
- Do not place the developer unit in an area with high temperature or humidity area, and keep it out of direct sunlight.
- Be careful not to spill the developer powder.
- Be sure not to touch the exposed developer, for it will make your hands dirty.

1 Turn the power off.

2 Push the clamshell release button and open the printer.

3 Loosen the green fixing screw and remove the used developer unit together with the toner cartridge.

4 Close the printer so that the drum unit isn't exposed to light.

5 Tap the top of the toner cartridge gently to avoid spilling the toner.

6 Remove the toner cartridge from the used developer unit by pressing the green release and gently pulling the two units apart.

7 Open the protective bag and remove the new developer unit. Carefully remove the tape holding the two plastic seals in place.

– 1 –

Image: Step 3 - Unscrewing the green fixing screw and removing the combined old developer and toner unit, as illustrated in the instruction sheet.

4. **Close the printer so that the drum unit isn't exposed to light.**This protects the sensitive drum from light damage.

5. **Tap the top of the toner cartridge gently to avoid spilling the toner.**This helps settle the toner powder.
6. **Remove the toner cartridge from the used developer unit by pressing the green release and gently pulling the two units apart.**

Panasonic

Developer Unit
KX-PDP2
for use with the KX-P4420

Caution:
Please read the entire instructions before proceeding.

Carton Content
Developer unit 1

Installation Instructions

Important:
The developer unit contains developer for printing.
- Keep the developer unit away from dust and small objects.
- Do not place the developer unit in an area with high temperature or humidity area, and keep it out of direct sunlight.
- Be careful not to spill the developer powder.
- Be sure not to touch the exposed developer, for it will make your hands dirty.

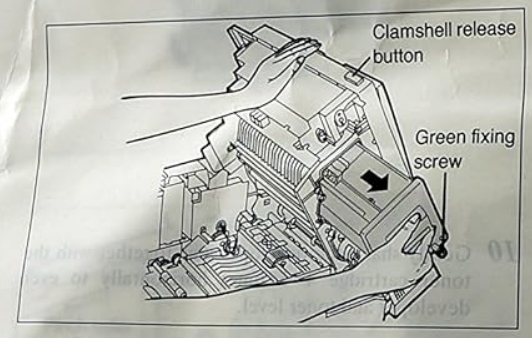

1 Turn the power off.

2 Push the clamshell release button and open the printer.

3 Loosen the green fixing screw and remove the used developer unit together with the toner cartridge.

4 Close the printer so that the drum unit isn't exposed to light.

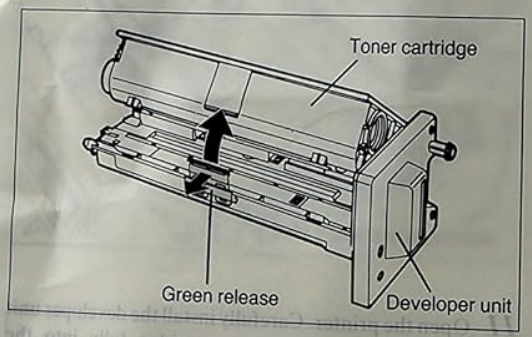

5 Tap the top of the toner cartridge gently to avoid spilling the toner.

6 Remove the toner cartridge from the used developer unit by pressing the green release and gently pulling the two units apart.

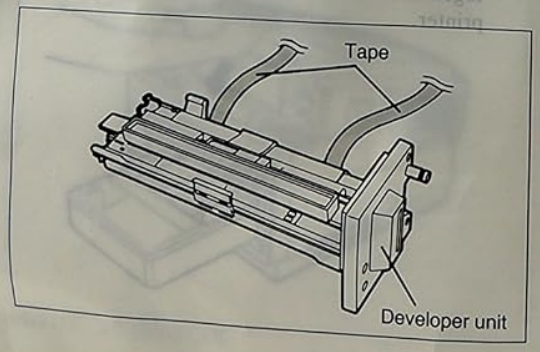

7 Open the protective bag and remove the new developer unit. Carefully remove the tape holding the two plastic seals in place.

– 1 –

Image: Step 6 - Detaching the toner cartridge from the old developer unit by pressing the green release tab, as depicted in the

instruction sheet.

7. **Open the protective bag and remove the new developer unit. Carefully remove the tape holding the two plastic seals in place.**

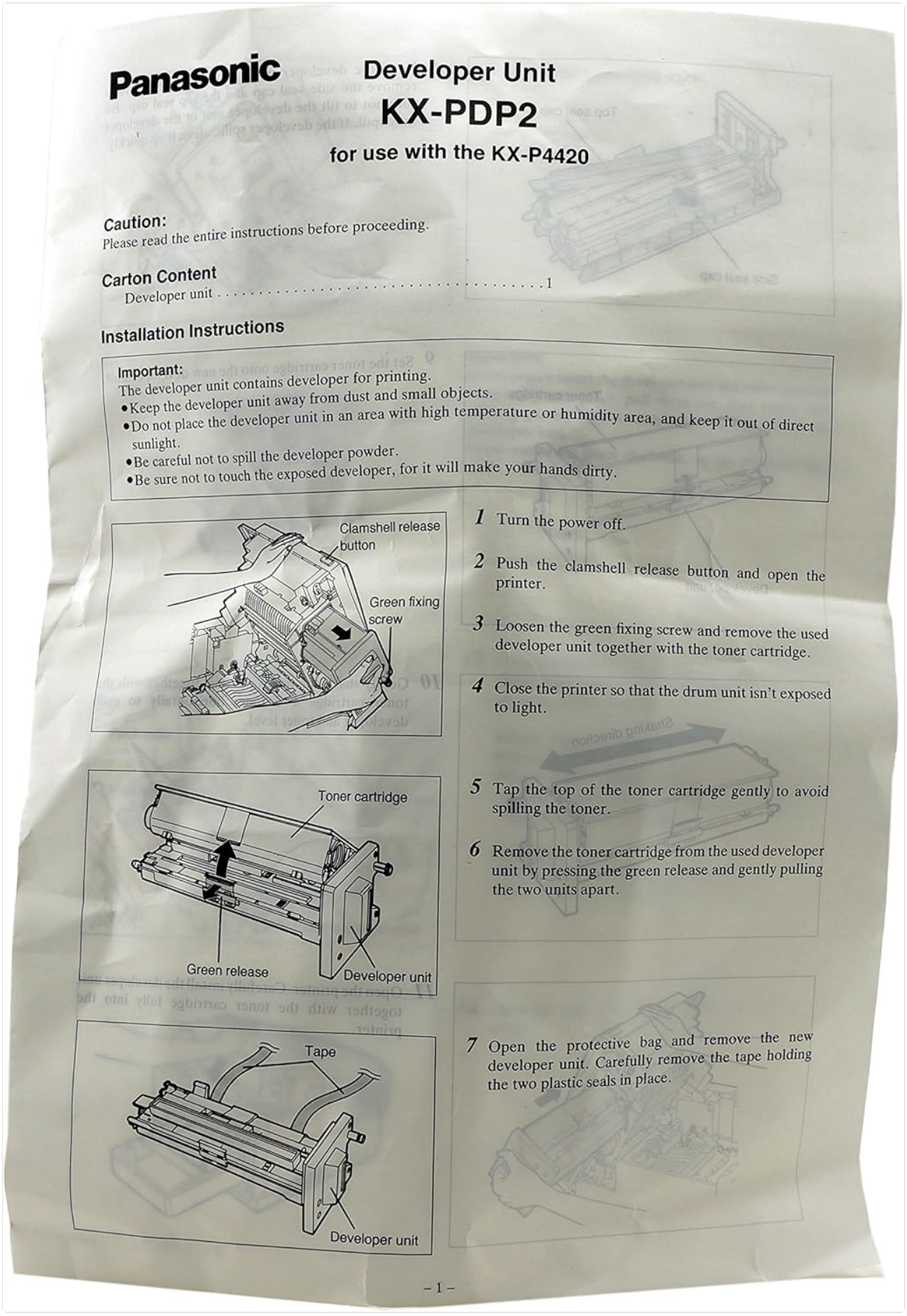

Panasonic

Developer Unit

KX-PDP2

for use with the KX-P4420

Caution:
Please read the entire instructions before proceeding.

Carton Content
Developer unit 1

Installation Instructions

Important:
The developer unit contains developer for printing.
- Keep the developer unit away from dust and small objects.
- Do not place the developer unit in an area with high temperature or humidity area, and keep it out of direct sunlight.
- Be careful not to spill the developer powder.
- Be sure not to touch the exposed developer, for it will make your hands dirty.

1 Turn the power off.

2 Push the clamshell release button and open the printer.

3 Loosen the green fixing screw and remove the used developer unit together with the toner cartridge.

4 Close the printer so that the drum unit isn't exposed to light.

5 Tap the top of the toner cartridge gently to avoid spilling the toner.

6 Remove the toner cartridge from the used developer unit by pressing the green release and gently pulling the two units apart.

7 Open the protective bag and remove the new developer unit. Carefully remove the tape holding the two plastic seals in place.

– 1 –

Image: Step 7 - Unpacking the new developer unit and removing protective tape from the seals, as shown in the instruction sheet.

8. **Insert the toner cartridge into the new developer unit.** Ensure it clicks securely into place.
9. **Insert the combined new developer unit and toner cartridge into the printer.** Align it correctly and push until it locks.
10. **Tighten the green fixing screw.** This secures the unit in place.
11. **Close the printer cover.**
12. **Turn the power on.** The printer should now recognize the new developer unit.

Operation

The Panasonic KX-PDP2 Developer Unit functions automatically once installed correctly within the Panasonic KX-P4420 laser printer. Its primary role is to prepare the toner for transfer to the drum unit, which is an integral part of the printing process. No direct user operation is required for the developer unit itself after installation. Refer to your Panasonic KX-P4420 printer's user manual for general printing operations.

Maintenance

The Panasonic KX-PDP2 Developer Unit is designed for a specific lifespan (approximately 18,000 pages). It generally does not require user maintenance. However, to ensure optimal performance and longevity of your printer and developer unit:

- **Storage:** Store new developer units in a cool, dry place away from direct sunlight and extreme temperatures.
- **Handling:** Always handle the unit carefully to avoid spilling developer powder or damaging sensitive components. Avoid touching the exposed developer.
- **Replacement:** Replace the developer unit when print quality deteriorates significantly, or when indicated by your printer's status messages. Always follow the installation steps outlined in this manual for replacement.
- **Cleaning:** Do not attempt to clean the internal components of the developer unit. If developer powder spills, clean it carefully with a dry cloth.

Troubleshooting

If you experience issues after installing the Panasonic KX-PDP2 Developer Unit, consider the following:

- **Poor Print Quality (Faint, Streaky, or Blank Pages):**
  - Ensure the developer unit and toner cartridge are correctly seated and locked into the printer.
  - Check if the toner cartridge is empty and replace if necessary.
  - Verify that the protective seals/tape were fully removed from the new developer unit during installation.
  - The developer unit may have reached the end of its lifespan. Consider replacing it.
- **Printer Not Recognizing Unit:**
  - Ensure the printer was powered off before installation and powered back on afterward.

- Re-seat the developer unit and toner cartridge to ensure proper connection.
- Check for any error messages on the printer's display and consult your KX-P4420 printer manual.

- **Spilled Developer Powder:**
  - Carefully clean up any spilled powder with a dry cloth. Avoid inhaling the powder.
  - Do not use water or liquid cleaners inside the printer.

If problems persist, contact Panasonic customer support or a qualified service technician.

Specifications

Feature	Detail
Brand	Panasonic
Model Number	KX-PDP2
Product Type	Laser Printer Developer Unit
Compatibility	Panasonic KX-P4420 Laser Printer
Estimated Page Yield	18,000 pages
Color	Black (Developer)
Item Weight	1.41 kg (3.11 lbs)
Package Dimensions	16.75L x 7.25W x 6.25H inches
UPC	092281041322
ASIN	B00004Z7R6

Warranty and Support

For information regarding warranty coverage, technical support, or service, please refer to the official Panasonic website or contact Panasonic customer service directly. Keep your purchase receipt as proof of purchase.
Panasonic Official Website: www.panasonic.com

© 2023 Panasonic Corporation. All rights reserved.
This manual is subject to change without notice.

Ask a question about this manual

Ask about setup, troubleshooting, compatibility, parts, safety, or missing instructions. Manuals+ will review the

question and use this page's manual context to help answer it.

Name

Anonymous

Email

you@example.com

After a successful submission, we securely hash the supplied account or form email before sending it to Microsoft Advertising for conversion attribution. Privacy details.

Question

Example: How do I reset this device or fix this error?

Details

Model number, symptoms, what you tried, or the section of the manual you are using.

Submit question

Open the live page

https://manuals.plus/asin/B00004Z7R6

More documents and user manuals: **https://manuals.plus/**