AROOT SBW-M3 WiFi-BT Combo Module User Manual

WiFi/BT Combo Module
Model: SBW-M3

Contents

1 Product Specification
2 Revision Record
3 Overview
4 Antenna specification
5 Description
6 RF Specifications
7 Certification Information
8 Documents / Resources
9 Related Posts

Product Specification

Designed by	Checked by	Approved by

Revision Record

Rev. No	Date	Item	Modifications	Approved

Federal Communication Commission Interference Statement
This device complies with Part 15 of the FCC Rules. Operation is subject to the following two conditions:

1. This device may not cause harmful interference, and
2. this device must accept any interference received, including interference that may cause undesired operation

This equipment has been tested and found to comply with the limits for a Class B digital device, pursuant to Part 15 of the FCC Rules. These limits are designed to provide reasonable protection against harmful interference in a residential installation. This equipment generates, uses, and can radiate radio frequency energy and, if not installed and used in accordance with the instructions, may cause harmful interference to radio communications. However, there is no guarantee that interference will not occur in a particular installation. If this equipment does cause harmful interference to radio or television reception, which can be determined by turning the equipment off and on, the user is encouraged to try to correct the interference by one of the following measures:

- Reorient or relocate the receiving antenna.
- Increase the separation between the equipment and receiver.
- Connect the equipment into an outlet on a circuit different from that to which the receiver is connected.
- Consult the dealer or an experienced radio/TV technician for help. FCC Caution: Any changes or modifications not expressly approved by the party responsible for compliance could void the user's authority to operate this equipment. This transmitter must not be co-located or operating in conjunction with any other antenna or transmitter.

Radiation Exposure Statement:
This equipment complies with FCC radiation exposure limits set forth for an uncontrolled environment. This equipment should be installed and operated with a minimum distance of 20cm between the radiator & your body.
This device is intended only for OEM integrators under the following conditions:

1. The antenna must be installed such that 20 cm is maintained between the antenna and users, and
2. The transmitter module may not be co-located with any other transmitter or antenna.

As long as the 2 conditions above are met, further transmitter tests will not be required. However, the OEM integrator is still responsible for testing their end-product for any additional compliance requirements required with this module installed

IMPORTANT NOTE: In the event that these conditions can not be met (for example certain laptop configurations or co-location with another transmitter), then the FCC authorization is no longer considered valid and the FCC ID can not be used on the final product. In these circumstances, the OEM integrator will be responsible for re-evaluating the end product (including the transmitter) and obtaining a separate FCC authorization

End Product Labeling
This transmitter module is authorized only for use in devices where the antenna may be installed such that 20 cm may be maintained between the antenna and users. The final end product must be labeled in a visible area with the following: "Contains FCC ID: WF5SBWM3". The grantee's FCC ID can be used only when all FCC compliance requirements are met.
Manual Information To the End-User
The OEM integrator has to be aware not to provide information to the end-user regarding how to install or remove this RF module in the user's manual of the end product which integrates this module. The end-user manual shall

include all required regulatory information/warnings as shown in this manual

ISED Canada (IC) Statement

This Class B digital apparatus complies with Canadian ICES-003.
This device complies with Industry Canada licence-exempt RSS standard(s). Operation is subject to the following two conditions:

1. this device may not cause interference, and
2. this device must accept any interference, including interference that may cause undesired operation of the device.

RF Radiation Exposure Statement:
This equipment complies with IC radiation exposure limits set forth for an uncontrolled environment. This equipment should be installed and operated with a minimum distance of 20 centimeters between the radiator and your body

Required end product labeling:
Any device incorporating this module must include an external, visible, permanent marking or label that states: “Contains IC: 9080A-SBWM3”
This radio transmitter (identify the device by certification number or model number if Category II) has been approved by Industry Canada to operate with the antenna types listed below with the maximum permissible gain indicated. Antenna types not included in this list, having a gain greater than the maximum gain indicated for that type, are strictly prohibited for use with this device.

Overview

1. **Antenna Specification**
   (1) Bluetooth Antenna
   (2) WiFi Antenna
2. **Description:**
   (1) Electrical Characteristics
   (2) Pin Map
3. **RF Specifications**
   (1) Bluetooth RF Specifications
   (2) WiFi RF Specifications
4. **Certification Information**

Antenna specification

(1) Bluetooth Antenna
1) Electrical specification

Frequency range	2.4 GHz band	
	2 400 MHz	2 485 MHz
VSWR	2.5: 1	3.5: 1
Peak Gain [dBi]	2.03	0.85
Impedance	50 Ω	
Polarization	Linear	

2) Mechanical specification

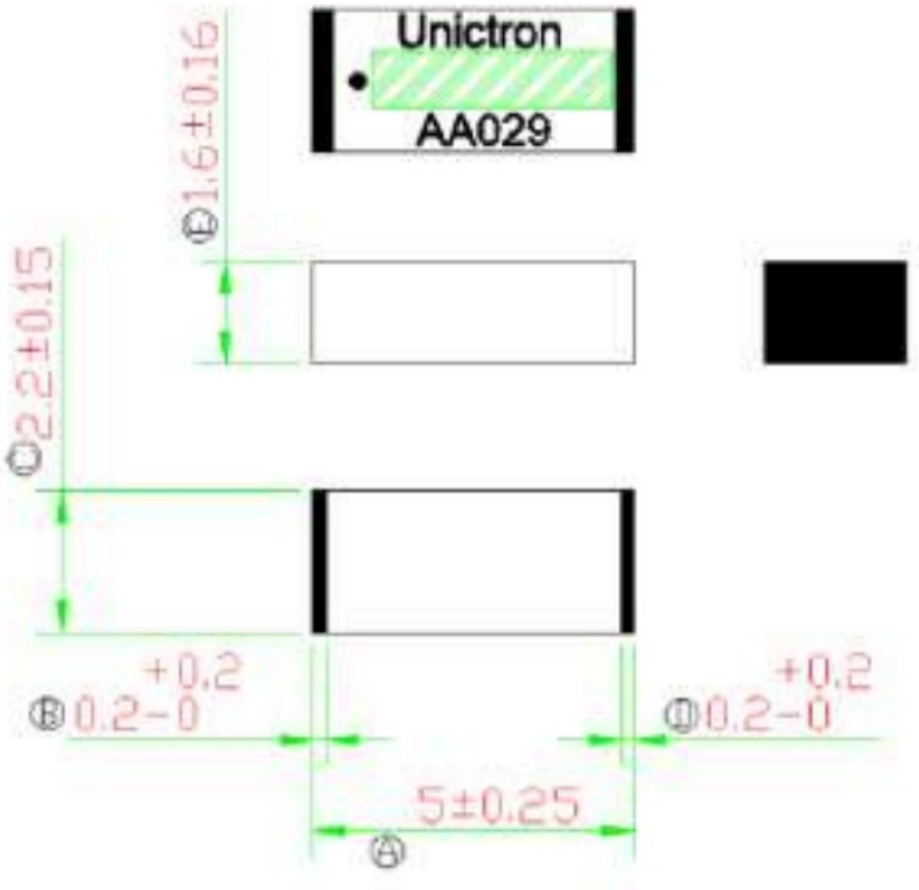

(2) WiFi Antenna
1) Electrical specification

Frequency range	2.4 GHz band	
	2 400 MHz	2 485 MHz
VSWR	2.5: 1	3.5: 1
Peak Gain [dBi]	2.81	2.25
Impedance	50 Ω	
Polarization	Linear	

Frequency range	5 GHz band	
	5 150 MHz	5 875 MHz
VSWR	2.5: 1	3.5: 1
Peak Gain [dBi]	3.52	4.60
Impedance	50 Ω	
Polarization	Linear	

2) Mechanical specification

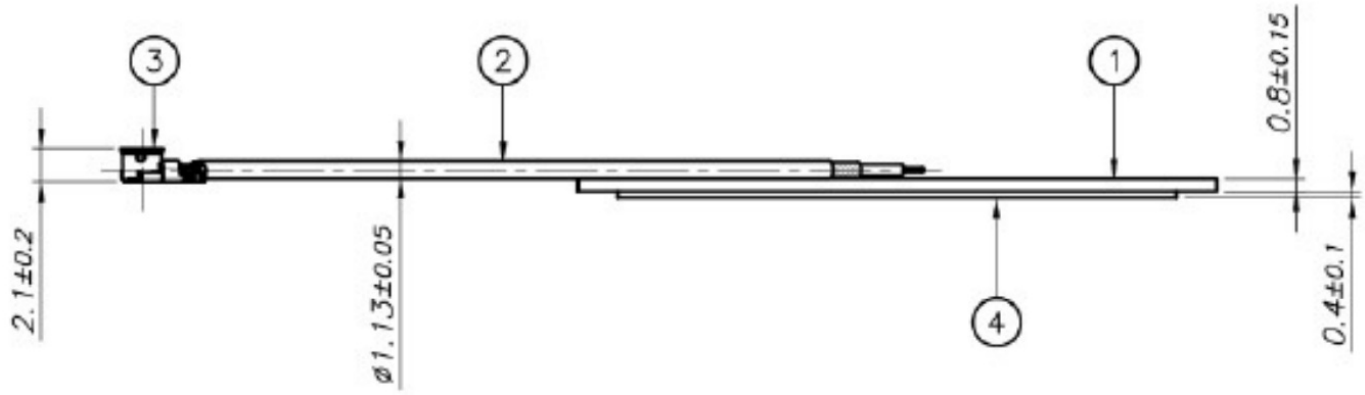

Description

(1) Electrical Characteristics

Parameter	Min	Typ.	Max	Unit
Supply Voltage	3.0	3.3	4.8	V
Storage Temperature	-40	25	125	℃

(2) Pin Map

Pin Na	Pin Name	Desolation	Pad Woe
1	GND	Common Ground	
2	JTAG_SEL		8i-directional
3	WL_REG ON	WLAN Power-On Reset	Input
4	JTAG TFtST_N		Si-directional
5	JTAG TCK		Bi-directional
6	BT REG ON	Bluetooth Power-On Reset	Input
7	JTAG_TMS		8i-directional
8	JTAGTDI		Bi-directional
9	JTAG TOO	Programmable input/output line	Bi-directional
10	WL_HOST WAKE		CMOS Output
11	USI3DM	US$ Data minus	8i-directional
12	USB DP	USB Data Plus	8i-directional
13	US82 AVD033		Bi-directional
14	GND	Common Ground	
15	LP0_32768	Low Power Oscillator	CMOS Input
16	BT PCMIN	Synchronous Data Input	CMOS input
17	BT_PCM CLK	Synchronous Data Clock	Bi-directional
18	BT PCM SYNC	Synchronous Data Sync	8i-directional
19	BT DEV WAKE	Host to wake Bluetooth	CMOS Input
20	BT_PCM_OUT	Synchronous Data Output	CMOS Output
21	BT_UART TXD	UART Data Output	Si-directional
22	BT DART CTS		Si-directional
23	I3T_UART RDX	UART Data Input	CMOS input
24	GND	Common Ground	
25	ST ANT	Bluetooth Antenna	RF
26	GND	Common Ground	
27	BT HOST WAKE	Bluetooth to wake the host	CMOS Output
28	BT_UART RTS		CMOS input

Pin No.	**Pin Name**	**Description**	**Pad Type**
29	GPIOS	**Programmable input/output line**	**Bi-directional**
30	GP102	**Programmable input/output line**	**Bi-directional**
31	**GPIO3**	**Programmable input/output line**	**Bidirectional**
32	**GNO**	**Common Ground**	
33	**11V1F1 ANT**	**WIFI Antenna**	**RF**
34	**GND**	**Common Ground**	
35	**GM)**	**Common Ground**	
36	**GND**	**Common Ground**	
37	**GND**	**Common Ground**	
38	**GND**	**Common Ground**	
39	**GND**	**Common Ground**	
40	**GND**	**Common Ground**	
41	**GO**	**Common Ground**	
42	**GND**	**Common Ground**	
43	**10 VDD**	**Input/Cul:W(1O Port) Power** 1.8V	Power
IL	Main VOID	Main Power 3.3V	Power
45	**STRAP_2**		
46	**STRAP 0**		
47	**SDIO DATA 1**	**SDIO V3.0 data line** 1	**Bi-directional**
48	**SDIO DATA 0**	**SDIO V3.0 data line** C	**Bi-directional**
49	**SDIO DATA 3**	**SDIO V3.0 data line** 3	**Bi-directional**
SC	**SDIO CMO**	**SD* V3.0 common line**	**Bi-directional**
Si	SDIO **DATA 2**	**SDIO V3.0 data line 2**	**Bi-directional**
52	**SDIO CLX**	**SDIO V3.0 clock line**	**Bi-directional**

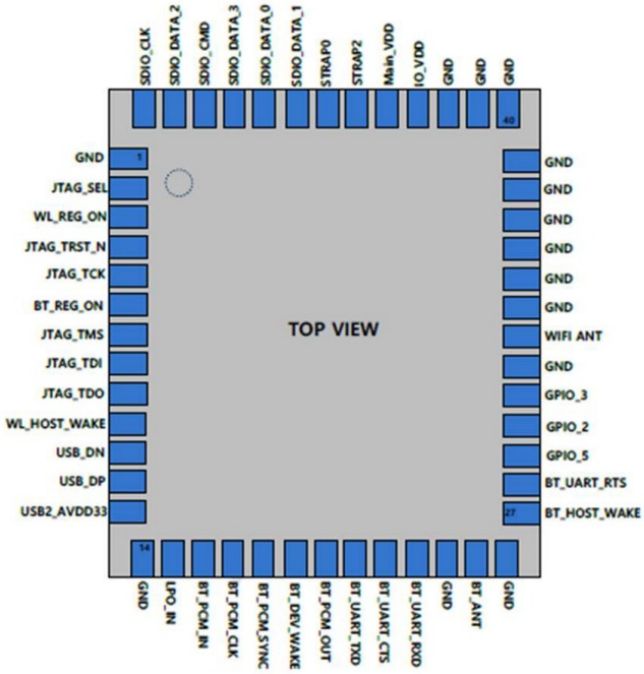

RF Specifications

(1) Bluetooth RF Specifications

Bluetooth Receiver RF Specifications

Parameter		**Min**	**Typ**	Max	Unit
Frequency Range		2L02		2480	MHz
RX sensitivity	GFSK0.1%BERIMbps		-88	-93.5	dBm
	st/4-DQPSK 0.01% **BER** 2M bps		**–88**	**-93.5**	
	8-DPSK law% **BER** 3Mbps		–80	**_89.5**	
C/I co-channel	GFSK. 0.1%			11	dB
	TE/4-DC2SK 0.1%			13	
	8-DPSK 0.1%			21	
C/I 1MHz **ADJ. Ch.**	GFSK. 0.1%			0	
	rt/4-DQPSK. **0.1%**			0	
	8-DPSK **0.1%**			5	
C/I 2MHz ADJ. Ch.	GFSK. 0.1%			-30	
	rt/4-DOPSK. **0.1%**			**-30**	
	8-DPSK 0.1%			-25	
CA 23MHz ADJ. Ch.	GFSK. 0.1%			-40	
	11/4-DCPSK 0.1%			-40	
	8-DPSK 0.1%			-33	
C/1 **image channel**	G:SK 0.1%			-9	
	rt/h-DoOPSK. 0.1%			-7	
	8-DPSK 0.1%			0	
Snow Emissions	30MHz ～1CH:		-95	-62	dBm
	1～12.75GHz		-70	-47	
	851～894MHz		-147		
	925～9600.1Hz		-147		
	1805～182CMHz		-147		
	1930～199CMHz		-147		
	2110～2170MHz		-147		

Bluetooth Transmitter RF Specifications

Parameter		Min	Typ	Max	Unit
Frequency Range		2402		2480	MHz
TX sensitivity		-4	2	6	dBm
Power Control step			4		dB
20dB bandwidth			960	1000	MHz
Out-of Band Spurious Emissions	30MHz – 1GHz			-36	dBm
	1GHz-12 75GHz			-30	
	1.8GHz-5 3GHz			-47	
	5.1GHz – 5.3GHz			-47	

Local Oscillator Performance

Parameter		Min	Typ	Max	Unit
Initial Carrier Frequency Tolerance			+25	+75	MHz
Frequency Drift	DH1 packet		+8	±25	kHz
	DH3 packet		+8	±40	
	DH5 packet		+8	±40	
	Drift rate		5	20	kHz/50us

BLE RF Specifications

Parameter		**Min**	**Typ**	Max	Unit
Frequency Range		2402		2480	MHz
TX sensitivity			8.5		dBm
RX sense			-92	-95.5	dBm
Mod Char.	Delta Fl average	225	255	275	kHz
	Delta F2 average	230			
	Ratio	0.8	1 00		

Note: The above-mentioned values may vary depending on the circuit, in which this component is actually incorporated. You are, therefore, kindly requested to test the performance of this component t incorporated in your set.

(2) WiFi RF Specifications

2.4GHz Band RF Specifications

2.4GHz Switch time specifications

Item	Min	Typ	Max	Unit
TX/RX Switch time			5	us
RX/TX Switch time			2	Us
Power-up and power-down ramp time			∠2	us

WLAN *2* 4GHz Receiver Performance Specifications

Parameter	Condition/Notes	Min	Typ	Max	Unit
Frequency range	–	240C	–	25C0	MHz
RX sensitivity IEEE 802.11b (8% PER for 1024 octet PSDU)	1 Mbps DSSS	–	-98.4	–	dBm
	2 Mbps DSSS	–	-95.7	–	dBm
	5.5 Mbps DSSS	–	-94.1	–	dBm
	11 Mbps DSSS		-90.4	–	dBm
RX sensitivity IEEE 802. iig (10% PER for 1024 octet PSDU)	6 Mbps OFDM	–	-95.0	–	dBm
	9 Mbps OFDM	–	-94.3	–	dBm
	12 Mbps OFDM	–	-93.5	–	dBm
	18 Mbps OFDM	–	-90.6	–	dBm
	24 Mbps OFDM	–	-87.4	–	dBm
	36 Mbps OFDM	–	-84.1	–	dBm
	48 Mbps OFDM	–	-79.3	–	dBm
	54 Mbps OFDM	–	-77.9	–	dBm
RX sensitivity IEEE 802.11n	20 MHz channel spacing for all MCS rates				
	MCSO	–	-94.5	–	dBm
	MCS1	–	-91.9	–	dBm
	MCS2	–	-90.1	–	dBm

(10% PER for 4096 octets PSDU) I Defined for default parameters: 800 ns GI and non-STBC.	MCS3		-89.5	–	dBm
	MCS4	–	-83.0	–	dBm
	MCS5	–	-78.3	–	dBm
	MCS6	–	-76.4	–	dBm
	MCS7		-74.4	–	dBm

WLAN 2.4GHz Receiver Performance Specifications(Cont.)

Parameter	Condition/Notes	Min	Typ	Max	Unit
RX sensitivity IEEE 802.11an with LDPC (10% PER for 4096 octet PSDU) at RF port. Defined for default parameters: 800 ns GI,	20 MHz channel spacing for all MCS rates				
	MCS7	–	–77.6	–	dBm
Blocking level for 3 dB RX sensitivity degradation (without external filtering)[2]	776–794 MHz (CDMA2000):				
	Blocker frequency = 794 MHz	–	–16	–	dBm
	824–849 MHz[3] (cdmaOne):				
	Blocker frequency = 849 MHz	–	–11	–	dBm
	824–849 MHz (GSM850):				
	Blocker frequency = 849 MHz	–	–11	–	dBm
	880–915 MHz (E-GSM):				
	Blocker frequency = 915 MHz	–	–11	–	dBm
	1710–1785 MHz (GSM1800):				
	Blocker frequency = 1785 MHz	–	–12	–	dBm
	1850–1910 MHz (GSM1900):				
	Blocker frequency = 1910 MHz	–	–13	–	dBm
	1850–1910 MHz (cdmaOne):				
	Blocker frequency = 1910 MHz	–	–5	–	dBm
	1850–1910 MHz (WCDMA):				
	Blocker frequency = 1910 MHz	–	–19	–	dBm
	1920–1980 MHz (WCDMA):				
	Blocker frequency = 1980 MHz	–	–19	–	dBm
	2300–2400 MHz (LTE band 40)				
	Blocker frequency = 2300 MHz	–	–29	–	dBm
	Blocker frequency = 2365 MHz	–	–35	–	dBm
	2500–2570 MHz (LTE band 7):				
	Blocker frequency = 2505 MHz	–	–39	–	dBm
	Blocker frequency = 2565 MHz	–	–35	–	dBm
	2570–2620 MHz (LTE band 38):				
	Blocker frequency = 2575 MHz	–	–35	–	dBm
	2496-2690 MHz (LTE band 41):				
	Blocker frequency = 2501 MHz	–	–42	–	dBm
	Blocker frequency = 2685 MHz	–	–17	–	dBm
	2545–2575 MHz (XGP Band):				
	Blocker frequency = 2550 MHz	–	–33	–	dBm
In-band static CW jammer immunity (fc – 8 MHz < fcw < + 8 MHz)	RX PER < 1%, 54 Mbps OFDM, 1000 octet PSDU for: (RxSens + 23 dB < Rxlevel < max.	–80	–	–	dBm
Input In-Band IP3	Maximum LNA gain	–	–10	–	dBm
	Minimum LNA gain	–	5	–	dBm
Maximum Receive Level @ 2.4 GHz	@ 1, 2 Mbps (8% PER, 1024 octets)	–3.5	–	–	dBm
	@ 5.5, 11 Mbps (8% PER, 1024	–9.5	–	–	dBm
	@ 6–54 Mbps (10% PER, 1024	–9.5	–	–	dBm
	@ MCS0–MCS7 rates (10% PER, 4095 octets)	–9.5	–	–	dBm

MAN 2.4GHz Receiver Performance Specifications(Cont.)

Parameter	Condition/Notes		Min	Typ	Max I	Unit
Adjacent channel rejection–DSSS 1Difference between interferin g and the desired signal at 8% PER for 1024: octet PSDU with the desired signal level of speci fied ii **Condition/Notes)**	Desired and interfering signal 30 MHz apart					
	1 Mbps DSSS	**-74 dBm**	35	**–**	**–**	**dB**
	2 PAbps C6SS	**-74 dem**	**35**	**–**	**–**	
	Desired and interfering signal 25 MHz apart					
	Si Mbps	**-70 dBm**	**35**	–	–	d8
	11 Mbps OFDM	**-70 dem**	**35**	**–**	**–**	**d3**
Adjacent channel rejection-OF OM	**6 Mbps OFDM**	**-79 d8m**	16	–	–	c13
I **Difference ben, en interfering**	**9 Mbps OFOM**	**-78 dem**	**15**	**–**	**–**	**dB**
ar d desired signal (25 MH: ap art) at **10%**	**12 Mbps OFDM**	**-76 dem**	**13**	**–**	**–**	**dB**
	18 Mbps OFOM	**-74 dBm**	11	**–**	**–**	**dB**
PER for 1024 octet PSC() with desired	**24 lips OFDM**	**-71 dBm**	**8**	**–**	**–**	**dB**
	36 Mbps OFOM	**-67 dern**	**4**	**–**	**–**	**dB**
sign level as specified in Cond ition/	48 Webs OFDM	-63 d8m	0	_	**–**	**dB**
	54 Mbps OFOM	**-62 dBm**	**-1**	**–**	**–**	**dB**
Adjacent channel rejection MC SO- MCS7 Difference between interfering	**MCCOY**	**-79 dBm**	**16**	**–**	**–**	**dB**
	MCS1	**-76 dem**	13	–	–	**dB**
and desired signal (25 MI-_ ap art) at	**MCS2**	**-74 dBm**	11	**–**	**–**	**dB**
	MCS3	**-71 dBm**	8	**–**	**–**	**dB**
10% PER for 4096 octet PSDU **with desired signal level as sp ecified in Condition/Notes)**	**PitCS4**	**-67 dem**	**4**	**–**	**–**	**dB**
	MCSS	**-63 dBm**	0	**–**	**–**	**dB**
	MCS6	**-62 dBm**	-1	**–**	**–**	**dB**
	MCS7	**-61 dBm**	-2	**–**	**–**	**dB**
Ma: Ocimum receiver gain	**–**	**–**	**–**	**70**	**–**	**dB**
Gain control step	**–**	**–**	**–**	**3**	**–**	**dB**
RSSI acctracy[4]	**Rzrinoi -9S[5] dRrri to -30 dBm**		**-5**	**–**	5	**dB**
	The range above -30 dBm		-8	**–**	8	**dB**
Return loss	**Z_o = 50Ω across the dynamic**		-10	11.5	13	**dB**
Receiver cascaded noise figur e	**At maximum gain**		**–**	**4**	**11.5**	**dB**

WLAN 2.4GHz Transmitter Performance Specifications

Parameter	Condition/Notes		Min	Typ	Max	Unit
Frequency range	–		2400	–	2500	**MHz**
Transmitted power in cellular and bands (at +21 t 100% duty cycle 1 Mbps CCIO [1]	**776-794 MHz (CDMA2000)**		**–**	**-164**	**–**	**dBm/Hz**
	869-960 MHz(cdmaOne)		**–**	**-163**	**–**	**dBm/Hz**
	1450-1495 (DAB)		**–**	**-153.6**	**–**	**dBm/Hz**
	1570-1580 MHz (GPS)		**–**	**-1512**	**–**	**dBm/Hz**
	1592-1610 MHz (GLONASS)		**–**	**-1504**	**–**	**d8m/Hz**
	1710-1800 (05C-1800-Uplink)		**–**	**-145**	**–**	**dBm/Hz**
	1805-1893 Mit (GSM 1800)		**–**	**-139**	**–**	**d8m/Hz**
	1850-1910 MHz (GSM 1900)		**–**	**-139**	**–**	**d8m/Hz**
	1910-1930 MHz (TDSCOMALT E)		**–**	**-140**	**–**	**d8m/Hz**
	19130-1990 MHz (GSM1900. c dmaOne. WCDMA)		**—**	**—128**	–	**d8m/Hz**
	2010-2075 MHz (TD-SCDMA)		**–**	-131	–	**dBm/Hz**
	2110-2170 MHz (WCDMN			**-1**25	–	**d8m/Hz**
	2305-2370 (LTE band 40)		**–**	-95	–	**dBm/Hz**
	2370-2400 (LTE band 40)		**–**	-80	–	**dBm/Hz**
	2496-2530 (LTE band 41)			**—90**	**—**	**dBm/Hz**
	2530-2563 (LTE band 41)			**-110**	–	**dBm/Hz**
	2570-2690 (LTE band 41)			**-116**	**–**	**dBm/Hz**
	5000-5900 (MAN 5G)		**–**	**-155**	**–**	**dBm/Hz**
EVM Does Not Exceed						
TX power at the chip port for t he highest power level setting at 25•C and VBAT = 3.6V with spectral mask and EVM compl iance	**W2.11b (DSSS/ CCK)**	-9 **dB**	**–**	+20.5	–	**dBm**
	OFDM. BPSK	**-8 dB**		**+19.5**	**–**	d8m
	OFDM. 64QAM	**-25 dB**	**–**	**+18**	**–**	**d8m**
	MCS7	**-27 dB**	**–**	**+17**	–	**dBm**
Phase noise	37.4 MHz crystal, integrated fro m 10 **kHz 10MHz**		**—**	0.45	_	Degrees
TX pacer control dynamic ran ge	**–**		**1**0	–	**–**	dB
Closed-loop TX power variation at the highest power level setting	**Across full temperature and v oltage,** range_ Applies **to 10 d 8m to 20 d8m output power ra nge.**		**–**	–	**±1.5**	dB

Carrier suppression	–	15	–	–	dBc
Gain control step	–	–	0.25	–	dB
Return loss at Chip port TX	Z_O **= 500**	–	6	–	dB

5GHz Band RF Specifications

WLAN 5GHz Receiver Performance Specifications

Parameter	**Condition/Notes**	**Min**	**Typ**	**Max,**	**Unit**
Frequency range.	–	4900	–	5845	MHz
RX sensitivity **IEEE** 80211a **10% PER fo r 1000 octet** PSDU)	**6 Mbps OFDM**	**–**	**-93.5**	**–**	dBm
	g Mbps OFDM	**–**	**-92.5**	**–**	dBm
	12 **Mbps OFDM**	**–**	**-91.7**	**–**	dBm
	18 **Mbps OFDM**	**–**	**-891**	**–**	dBm
	24 Mbps OFDM	–	-86.9	–	dBm
	36 Mbps OFDM	–	-82.6	–	dBm
	LE Mbps **OFDM**	**–**	-77.6	–	dBm
	4 Mbps OFDM	–	-76 .4		dBm
RX sensitivity **IEEE 802 11n** **1110% PER for 4096 octets** PSDU) **Defined for default parameters:** 800 **ns G and n on-STBC**	**20 MHz channel** spacing **for all** MCS **rates**				
	mag	**–**	**-93.0**	**–**	dBm
	MCS1	–	**-90.5**	**–**	dBm
	MCS2	**–**	**-88.0**		dBm
	MCS3	–	-84.6	–	dBm
	MCS4	–	81.5		dBm
	MCS5	–	-76.8	–	dBm
	MCS6	–	-74.9	–	**dBm**
	MCS7	**–**	-72.9	–	dBm
RX sensitivity **IEEE 8021 1n 10%PER** for 4096 octet s PSDU) **Defined for default parameters** 800 ns GI **and no n-STBC.**	**40 MHz** channel. spacing **for** all MSC rates.				
	MCS0	–	-91.0	**–**	dBm
	MCS1	–	-88.o	–	dBm
	MCS2	**–**	**-85.5**	**–**	dBm
	MCS3		**-82.2**	**–**	dBm
	MCS4	–	-78.9	–	dBm
	MCSS	–	-74.3	–	dBm

	MCS6	–	-72.8	–	dBm
	MCS7	–	-71.2	–	dBm
RX sensitivity IEEE 802.11ac 10% **PER for 4096 octets** P SDU) Defined for default parameters : 8OO ns GI and non-STBC.	20 **MHz channel spacing** for all MCS rates				
	MCSO NSS1	**–**	-93.2	–	dBm
	MCS1 NSS1	–	-90.5	–	dBm
	MCS2 NSS1	–	-88.3	–	dBm
	MCS3 NSS1	–	-95.2	–	dBm
	MCS4 NSS1	–	-85.2	–	dem
	MCS5 NSS1	–	-76.9	–	dBm
	MCS6 NSS1	–	-75.0	–	dBm
	MCS7 NSS1	–	-74.1	–	dBm
	MCS8 NSS1	–	-69.7		dBm

WLAN 5GHz Receiver Performance SpecificationsiCont.;fr

Parameter	Condit}on,Notes	Min	Typ	Max	Unit
RX sensitivity IEEE 802.11ac (10% PER for 4096 octets PS DU) Defined for default parameters : 800 ns GI and non-STBC.	40MHz channel spacing for all MCS rates				
	MCSO NSS1	–	-91.3	–	dBm
	MCS1 NSS1		-88.3	–	dBm
	MCS2 NSS1	–	-85.9		dBm
	MCS3 NSS1	–	-82.6	–	dBm
	rv1CS4 NSS1	–	-79.2	–	dBm
	tv1CS5 NSS1	–	-74.6	–	dBm
	tv1CS6 NSS1	–	-73.0		dBm
	MCS7 NSS1	–	-71.6	–	dBm
	MCS8 NSS1	–	-67.3	–	dBm
	MCS9 NSS1	–	-63.7	–	dBm
RX sensitivity IEEE 80211ac (10% PER for 4096 octets PSD U) Defined for default parameters	80 MHz charnel spacing for all MCS rates				
	MCSO NSS1	–	88.0	–	dBm
	MCS1 NSS1	–	-85.0	–	dBm
	MCS2 NSS1	–	-82.3	–	dBm
	MCS3 NSS1	–	-79.1	–	dBm
	MCS4 NSS1	–	-75.8	–	dBm

: 800 ns GI and non-STEC.	MCSS NSS1		–	-71.2	–	dBm
	MCS6 NSS1		–	-69.9		dBm
	MCS7 NSS1		–	-68.2	–	dBm
	MCS8 NSS1		–	-64.2	–	dBm
	MCS9 NSS1		–	-62.6	–	dBm
RX sensitivity IEEE 802.11ac 20/40/ 80 MHz channel spacin g with LDPC(10% PER for 409 6 octets PSDU) at RF port. Defined for default parameters : 800 ns GI. LDPC coding and non-STBC.	MCS7 NS S1	20 MHz	–	-75.8	–	dBm
	MCS8 NS S1	20 MHz	–	-71.9	–	dBm
	MCS7 NS S1	40 MHz.	–	-73.8	–	dBm
	MCS8 NS S1	40 MH:	–	-69.9	–	dBm
	MCS9 NS S1	40 MHz	–	-67.9	–	dBm
	MCS7 NS S1	80 MHz	–	-70.5	–	dBm
	MCS8 NS S1	80 MHz	–	-66.6	–	dBm
	MCS9 NS S1	80 MHz	–	-64.5	–	dBm

WLAN SGHz Receiver Performance Specifications(Cont.)

Parameter	Con6rtion/Notes	Min	Typ	Max	Unit
	776-794 MHz (CDMA2000):				
	Blocker frequency = 794 MHz	–	-21	–	dBm
	824-849 MHz² (cdmaOne)				
	Blocker frequency= 849 MHz	–	– 10	–	dBm
	880-915MHz(E-GSM):				
	Blocker frequency – 849 MHz:	–	_12	–	dBm
	1710-1785 MHz (GSM1800):				
	Blocker frequency = 915 MHz		-13	–	dBm
	1710-1785 MHz **(GSM1800):**				
	Blocker frequency =1785MHz		-13	–	dBm
	1850-1910 MHz (GSM1900):				
	Blocker frequency = 1910 MHz	–	-18		dBm

Blocking level for 3dB RX sens itivity degradation (without exte rnal filtering)[1]	**1850-1910** MHz (cdmaOne):				
	Blocker frequency =[1]1910 Mkt	–	-20	–	dBm
	1850-1910 **MHz** (INCDMAI:				
	Blocker frequency = 1910		-20	–	dBm
	1920-1980 MHz **(WCDMA):**				
	Blocker frequency =1980 MHz		-20	–	dBm
	2300-2400 MHz **(LTE band** 40)				
	Blocker frequency = 2395 MHz	–	–19	–	dBm
	2500-2570 MHz (LTE hand 7):				
	Blocker frequency = 2565 MHz		-16	–	dBm
	2570-2620 MHz (L**TF hand 38):**				
	Blocker frequency=2615 MHz	–	-16	–	dBm
	2496-2690 MHz (LTE hand 41):				
	Blocker frequency = 2685 MHz	–	-16	–	dBm
	2545—2575MHz (XGP Band)				
	Blocker frequency = 2570 MHz		-18		dBm
Input In-Bard IP3	Maximum LNA gain	–	-11	–	dBm
	Minimum LNA gain	–	5	–	dBm
Maximum receive level @ 524 GHz	@ 6.9.12 Mbps	–	–	–	dBm
	@ 18,24 ,36.48,58 Mbps	–	–	–	dBm

LLAN 5GHz Receiver Performance Specifications(Cont.)

Parameter	Condition/Notes		Mtn	Typ	Max	Unn
Adjacent channel rejection (Di fference between Interfering and desired signal (20 MHz: a part) at 10% PER for 1000 oct et PSDU words desired signal level as specified in Condition/ Notes)	**6 Mbps CF DM**	-79 dBm	16	–	–	dB
	9 Mbps CF DM	-78 dBm	15	–	–	dB
	12 Mbps CF DM	-76 dBm	13	–	–	d8
	18 Mbps CF DM	-74 dBm	11	–	–	dB
	24 Mbps C FDM	-71 dBm	8	–	–	dB
	36 Maps CF DM	-67 dBm	4	–	–	dB

	48 Mbps CF DM	-63 dBm	0	–	–	dB
	54 Mbps CF DM	-62 dBm	-1	–	–	dB
	65 Mbps CF DM	-61 dBm	-2	–	–	dB
Alternate adjacent channel. rejection (Difference between i nterfering **and** desired signal (40 MHz apart) at 10% PER for 1000[3] octet PSOU wit h deiced signal level as specifi ed in Condition Notes	**6 Mbps CF DM**	-78.5dBm	32	–	–	**dB**
	9 Maps CFDM	-77.5 dBm	31	–	–	dB
	12 pg"CFD M	-75.5 dBm	29	–	–	dB
	18 Mbps C FDM	-73.5 dBm	27	–	–	dB
	24 Mbps CF DM	-70.5 dBm	24	–	–	dB
	36 Mbps C FDM	-66.5 dBm	20	–	–	dB
	48 Mbps CF DM	-62.5 dBm	16	–	–	dB
	54 CFDM	**–61.5** dBm	15	–	–	dB
	65 Mops CF DM	-60.5 dBm .	14	–	–	dB
Maximum receiver pain	–		–	65	–	dB
Gain **control** step	–		–	3	–	dB
RSV accuracy[4]	Range -98 dem to -30		-5	–	5	dB
	The range above -30 dB m		-8	–	8	dB
Return loss	Z_o = 50Ω across the d ark range		10	–	13	dB
Receiver cascaded noise figur e	At maximum gain		–	5	–	dB

VLAN 5GHz Transmitter Performance Specifications

Parameter	Condition/Notes		**tan**	Typ	Max	**Unit**
Frequency range	–		4900	–	5845	MHz
Transmitted power in Delhi and bands at +18.5 dame 100% duty cycle. 6 Mbps OFCM) [1]	776-794 MFtt (CDMA2000)		–	-164	–	dBm/Hz
	869-960 MHz (cdmaOne GSM850)		–	-166	–	dBm/Hz
	1450-1495 (DAB)		–	-166	–	dBm/Hz
	1570-1580 MHz (GPS)		–	-166	–	dBm/Hz
	1592-1610 MHz (GLONASS)		–	-165.5	–	dBm/Hz
	1710-1800WSC-1800-Uplink:		–	-135	–	dBm/Hz
	1805-113E0 MHz (GSM 1800)		–	-165	–	dBm/Hz
	1850-1910 MHz (GSM 1900)		–	-165	–	dBm/Hz
	1910-1930 MHz (TDSCDMA. LTE)		–	-165	–	dBm/Hz
	1930-1990 MHz (GSM1900cdmaOne WCDMA0)		**–**	-165	–	dBm/Hz
	2010-2075 MHz (TDSCDMA)		–	-164.5	–	dBm/Hz
	2110-2170 Nit (VVCDMA)		–	-164	–	dBm/Hz
	2305-2370 CUE band 40)		–	-160	–	dBm/Hz
	2370-2400 (LTE band 40)		–	-163	–	dBm/Hz
	2400-2500 (WLAN 2G)		–	-160	–	dBm/Hz
	2496-2530 CUE band 41)		–	-161.5	–	dBm/Hz
	2530-2560 (LTE band 41)		–	-161.5	–	dBm/Hz
	2570-2690 (LTE band 41)		–	-161	–	dBm/Hz

Certification Information

Model: SBW-M3
Product Marketing Name: WiFi/BT Combo Module
FCC: WF5SBWM3
IC: 9080A-SBWM3 CE
KC: R-R-SWP-SBWM3 X
Anatel: 07424-20-01395

Manufacturer: Art Co., Ltd.
Address: 28-6 Gajangsaneopdong-ro, Osan-si, Gyeonggi-do, 18103, Republic of Korea
Tel: +82-31-8077-5000
Fax: +82-31-624-5310

• Product Label
Model: SBW-M3
FCC: WF5SBWM3
IC: 9080A-SBWM3
KC: R-R-SWP-SBW-M3
Anatel: 07424-20-01395

Rating:3.3V ⎓ 500mA

Art Co., Ltd
Copyright © 2020 by Aroot Co., Ltd. all rights reserve

Documents / Resources

AROOT WiFi/BT Combo Module Model: SBW-M3 Product Specification Designed by Checked by Approved by	**AROOT SBW-M3 WiFi-BT Combo Module** [pdf] User Manual SBWM3, WF5SBWM3, SBW-M3 WiFi-BT Combo Module, WiFi-BT Combo Module, Combo Module

Manuals+,