Contents [hide]

1 EK BLINDER-II-C LED Flood
2 SAFETY
3 INTRODUCTION
4 SPECIFICATIONS
5 DIMENSION
6 OVERVIEW
7 BASIC FUNCTIONS AND OPERATION
8 PHOTOMETRICS
9 POWER CONNECTION
10 INSTALLATION
11 MAINTENANCE
12 TROUBLESHOOTING
13 FAQ
14 Documents / Resources
14.1 References

EK BLINDER-II-C LED Flood

Specifications

- Model: Unknown
- Manufacturer: Unknown
- Website: www.eklights.com

WARNING! Before carrying out any operations with the unit, carefully read this instruction manual and keep it with cure for future reference. It contains important information about the installation, usage and maintenance of the unit.

SAFETY

General instruction

- The products referred to in this manual conform to the European Community Directives and are there- fore marked with CE.
- The unit is supplied with hazardous network voltage (230V~). Leave servicing to skilled personnel only. Never make any modifications on the unit not described in this instruction manual, otherwise you will risk an electric shock.
- Connection must be made to a power supply system fitted with efficient earthing (Class I appliance according to standard EN 60598-1). It is, moreover, recommended to protect the supply lines of the units from indirect contact and/or shorting to earth by using appropriately sized residual current devices.
- The connection to the main network of electric distribution must be carried out by a qualified electrical installer. Check that the main frequency and voltage correspond to those for which the unit is designed as given on the electrical data label.

- This unit is not for home use, only professional applications.
- Never use the fixture under the following conditions:
  - in places subject to vibrations or bumps;
  - in places with a temperature of over 40 °C. Make certain that no inflammable liquids, water or metal objects enter the fixture.
- Do not dismantle or modify the fixture.
- All work must always be carried out by qualified technical personnel. Contact the nearest sales point for an inspection or contact the manufacturer directly.
- If the unit is to be put out of operation definitively, take it to a local recycling plant for a disposal which is not harmful to the environment.

Warnings and installation precautions

- If this device will be operated in any way different to the one described in this manual, it may suffer damage and the guarantee becomes void. Furthermore, any other operation may lead to dangers like short circuit, burns, electric shock, etc.
- Before starting any maintenance work or cleaning the projector, cut off power from the main supply.
- Always additionally secure the projector with the safety rope. When carrying out any work, always com- ply scrupulously with all the regulations (particularly regarding safety) currently in force in the country in which the fixture's being used.
- Install the fixture in a well ventilated place.
- Keep any inflammable material at a safe distance from the fixture.
- Shields, lenses or ultraviolet screens shall be changed if they have become damaged to such an extent that their effectiveness is impaired.
- The lamp (LED) shall be changed if it has become damaged or thermally deformed
- Never look directly at the light beam. Please note that fast changes in lighting, e. g. flashing light, may trigger epileptic seizures in photosensitive persons or persons with epilepsy.
- Do not touch the product's housing when operating because it may be very hot.

INTRODUCTION

FEATURES

- 380W RGBA +90W WW LED
- 2800-10000K Variable color temperature
- Ra≥90, R9≥90
- Fan-free design and quiet operation suitable for studio use
- Selectable PWM frequency for flicker-free video with any camera
- 4 dimming curves with 16-bit control for smooth dimming
- Consistent color temperature throughout the dimming curve
- Built-in macros make for easy programming of stunning effects
- Compact body and light weight

SPECIFICATIONS

- Light Source: 380W RGBA, WW:90W
- LED Color Temperature: variable 2800-10000K, W:3148
- Luminous flux: 6020lm CRI≥90
- Beam Angle: 59.3°
- Filed Angle: 100°
- Tilt: 360° Strobe: 0-30Hz
- Dimmer: 4 dimming curves
- Mains: 100-240V, 50-60Hz, 122W
- Protocol: DMX512, RDM
- Power connection: PowerCorn in/out, linking up to 21pcs
- DMX connection: DMX in/out, linking up to 32pcs
- DMX Channel: 1CH/5CH/7CH/10ch1/10ch2/12CH/13CH/15CH/28CH
- IP Grade: IP20
- Ambient: 0-40°C
- Physical Dimensions: 415*93.7*231.7mm
- Weight: 3.7kg

DIMENSION

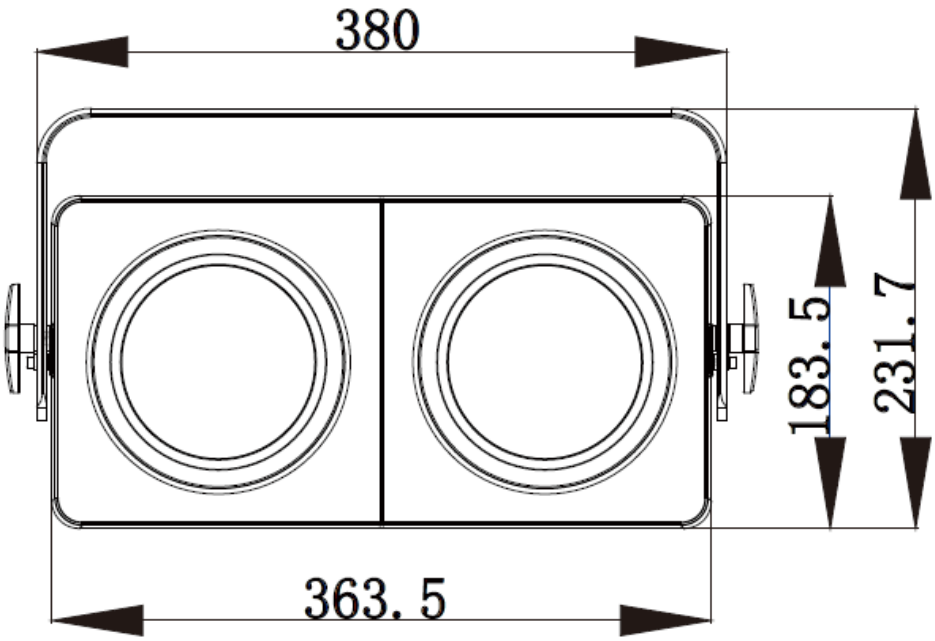

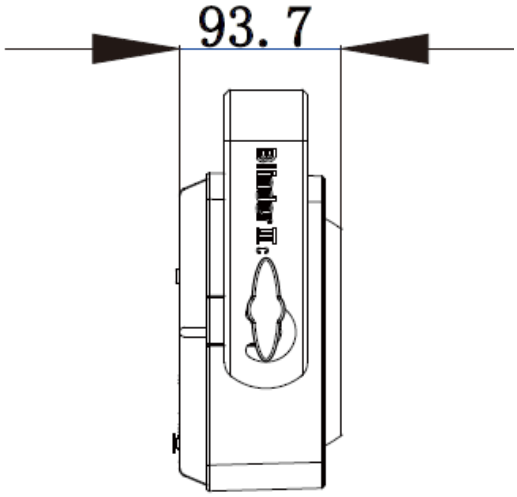

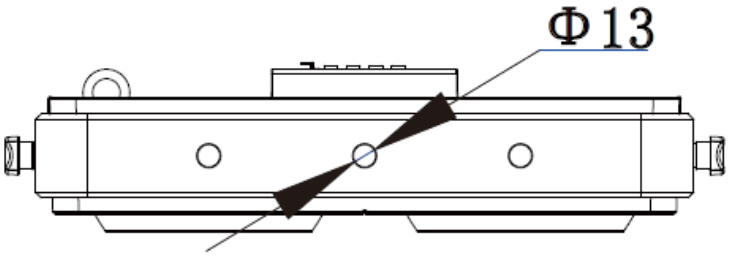

OVERVIEW

1. LCD Display
2. Fuse
3. Power In
4. Power Out
5. DMX In
6. DMX Out

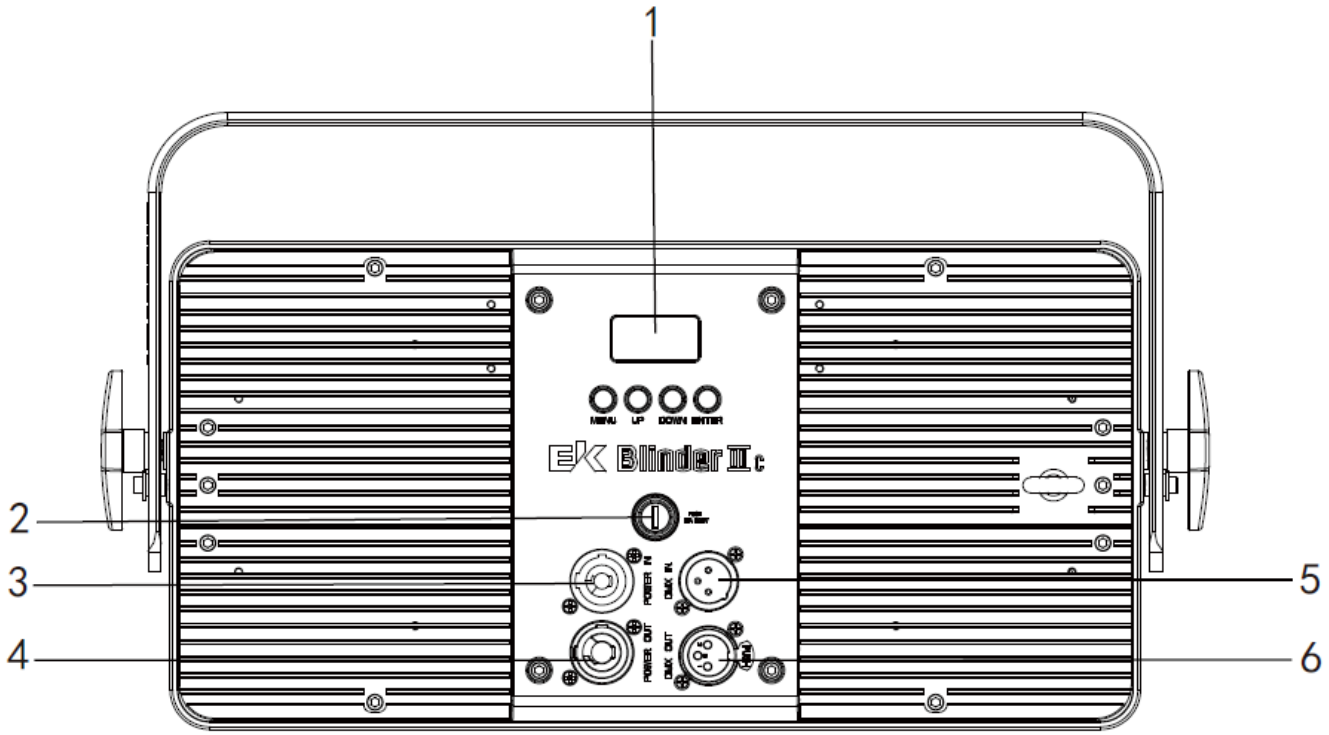

BASIC FUNCTIONS AND OPERATION

•

UP	DOWN	MODE	ENTER
Increase the displayed value, or scroll thru previous menu items	Decrease the displayed value, or scroll thru next menu items	Display main menu, or return to higher menu levels	Confirm displayed values, or activate displayed functions, or enter submenus, or save settings

Startup initialization: left and right keys

- **Shortcut:** When on the main interface, press and hold up and down buttons for 3S to display in reverse;
- **Battery** display: When there is no external power supply, long press and hold the right button for 3S to enter the setting menu parameters.

PHOTOMETRICS

Beam Angle 593°

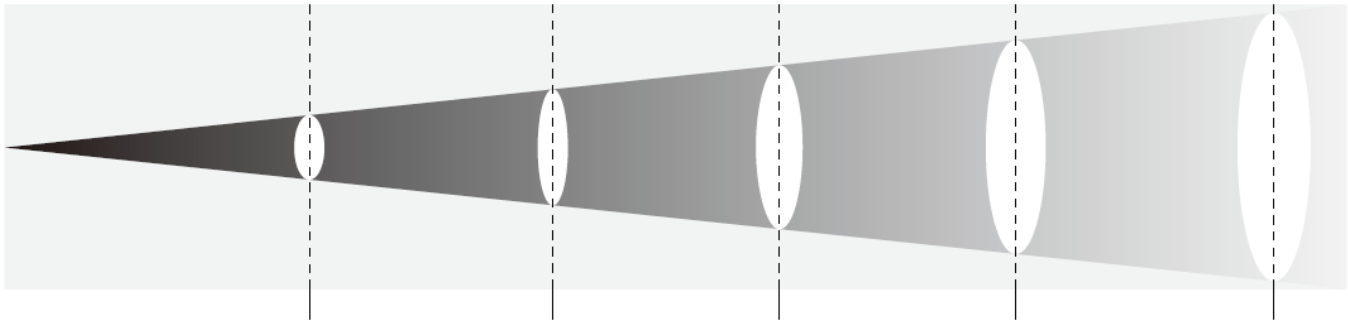

Distance (M)	3	5	10	15	20
Illuminance(lux)	591	213	53	24	13
Diameter(M)	3.42	5.69	11.39	17.08	22.78

POWER CONNECTION

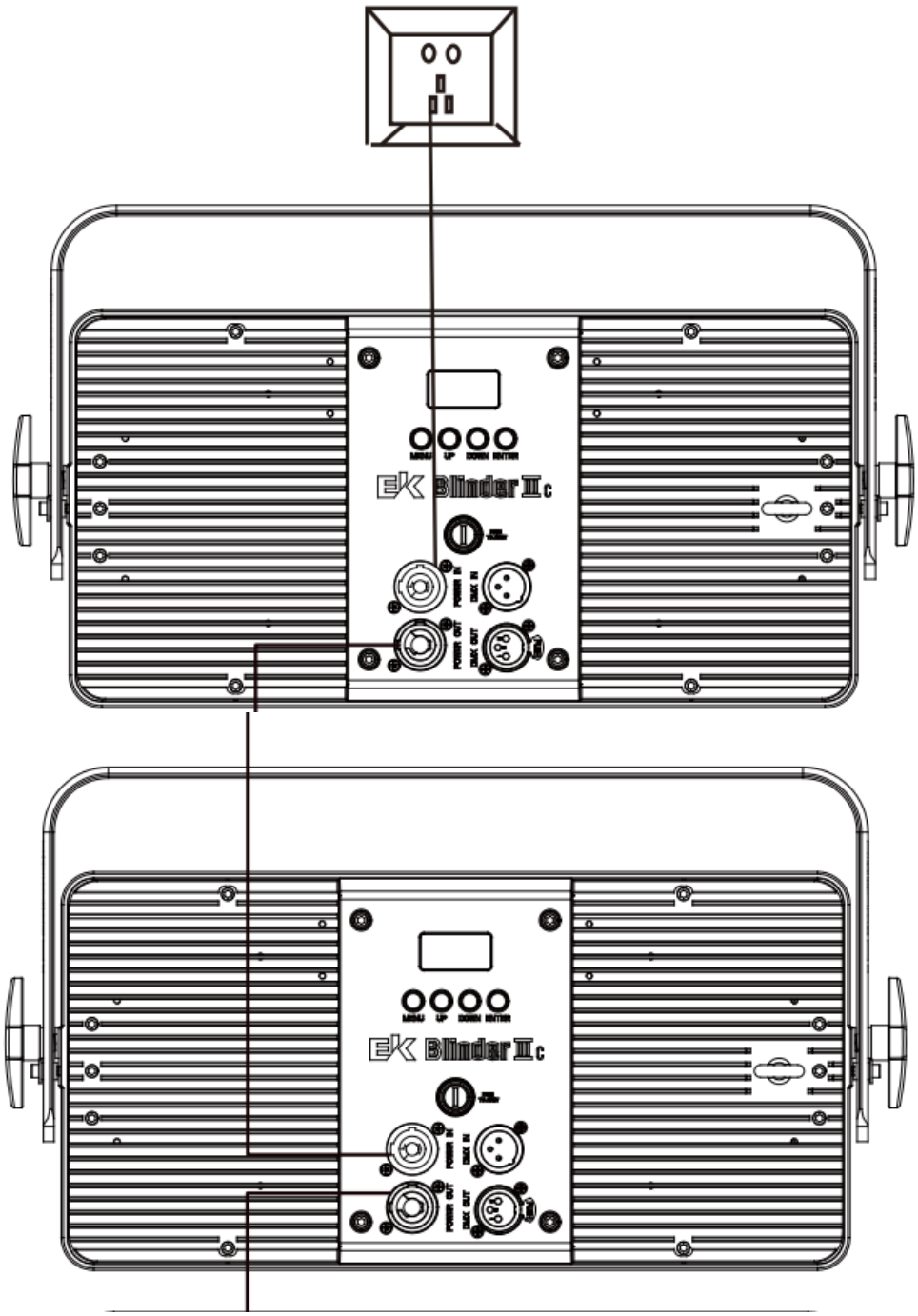

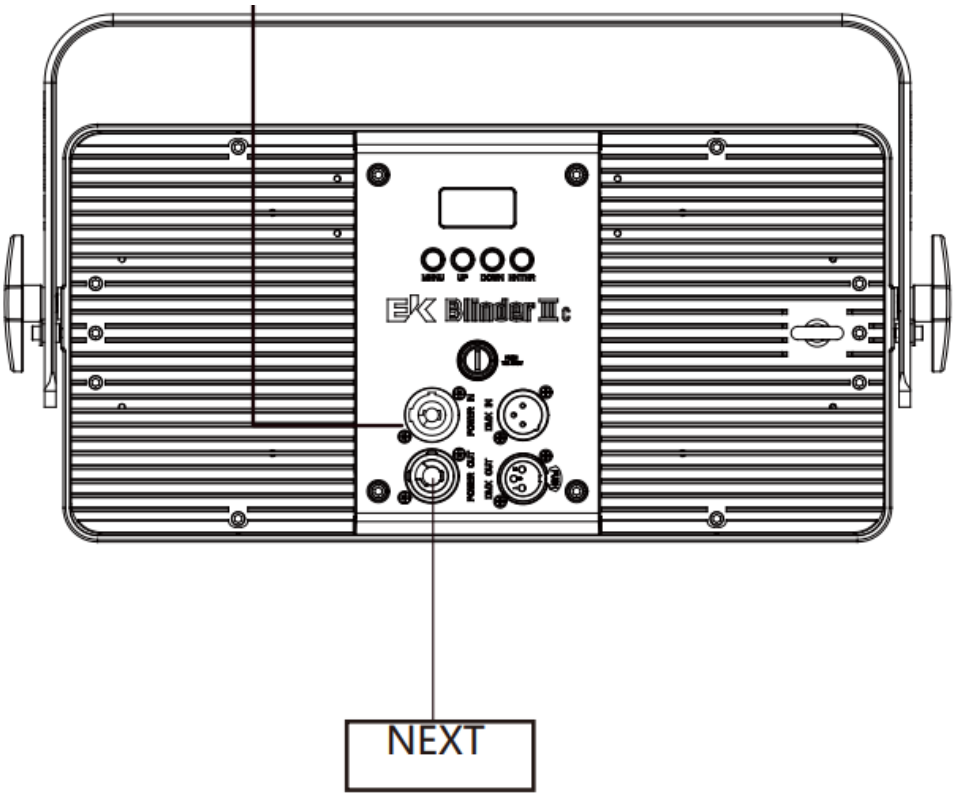

DMX CONNECTION

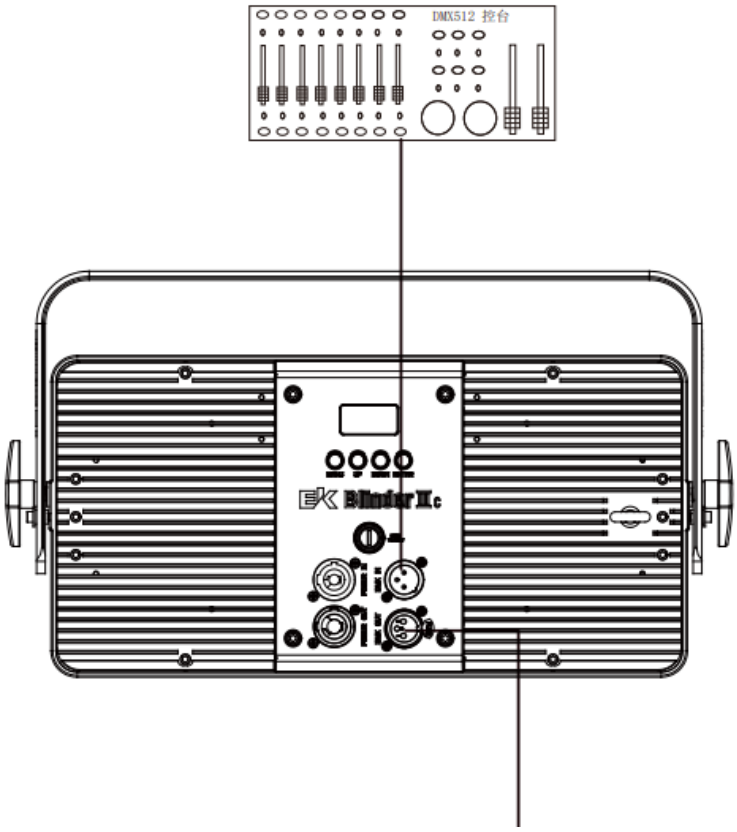

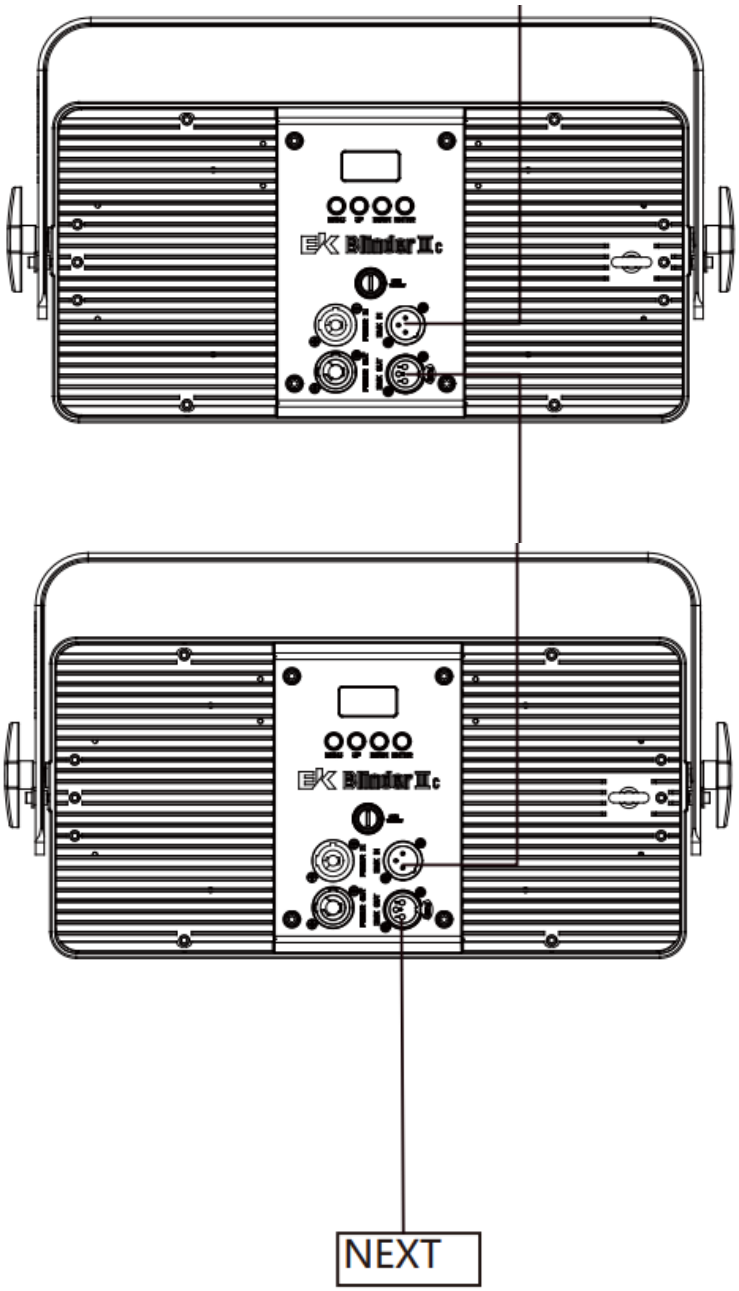

DMX MODE	1st Fixture	2nd Fixture	3rd Fixture	4th Fixture
1 Channel	001	002	003	004
3 Channel	001	004	007	010

INSTALLATION

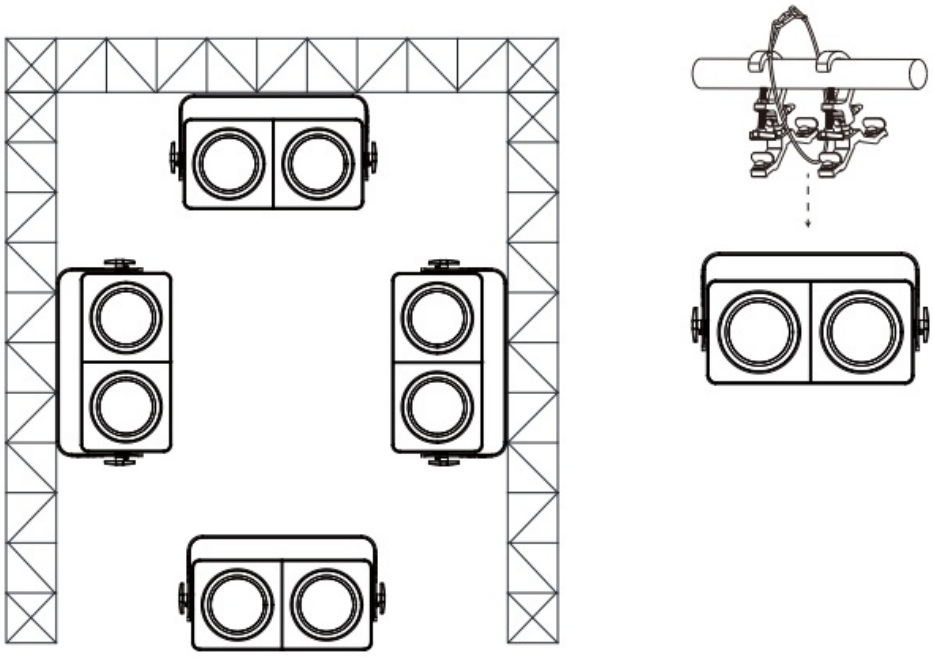

Notice

This product is only suitable for indoor use, with a protection level of IP20. The lighting fixtures should be kept clean and avoid use in damp or dusty environments. Maintenance should be carried out every three months. Qualified professionals are only allowed to install, operate, and maintain lighting fixtures, and ensure strict adherence to the procedures described in this manual. The lighting fixtures should be installed in a well ventilated area, at least 50CM away from the wall, and the ventilation holes should be checked for smoothness. Do not look directly at the light source to avoid damage to the eyes. The electrical connections must be operated by qualified installation personnel. Each lamp should be securely grounded and electrically installed in accordance with relevant standards. Do not use power cords with damaged insulation layer, and do not place the power cord on other wires. When the lamp is not in use or clean, please unplug the power cord and do not forcefully plug or drag the power cord directly. If the back cover of the lamp is equipped with a safety buckle or connection hole, for safety reasons, please use a safety rope to penetrate the connection hole for auxiliary lifting.

MENU

Blinder2-C Menu					
NO.	Main Menu	Menu level 2	Menu level 3	Menu level 4	Dedault

1	DMX Address	<001>			Default:001	
2	DMX Channel	1Ch	Virtual Color Wheel	……	C3050-Md Yellow	Default:12 CH
			Color Temperature	……	3200K	
			Manual Color Mixer	……	RGBAW=255	
		3Ch				
		5Ch				
		7Ch				
		10Ch1				
		10Ch2				
		12Ch				
		13Ch				
		15Ch				
		28Ch				
		HSV				
			C3050-Md Yellow			
			C3040-Lt Yellow			
			C3240-Amb Yellow			

3	Virtual Color Wheel	Virtual Color Wheel	C2340-VLt Amber C2040-Lt Amber C2050-Md Amber C2060-Dk Amber C1050-Lt Red C1080-Md Red C1020-NC Pink C1030-Md Pink C1630-Dk Pink C1250-Md Red Amber C1060-Dk Red Amber C1650-Magenta C6170-Dk Magenta C6020-Lt Lavender C5030-Lt Blue C5020-VLt Blue C5430-Lt Blue2	Dimmer<0-255>	Default:C3050-Md Yellow, Dimmer=255

			C5070-Blue		
			C5050-Md Blue		
			C5060-Dk Blue		
			C5690-Indigo		
			C5080-VDk Blue		
			C5081-VdK Blue 2		
			C4370-Yel Green		
			C4070-Green		
			C4550-Turquoise		
			C4560-Aqua		
			C4570-Blue Green		
		Color Temperature	2800K	Dimmer<0-255>	Default:3200K, Dimmer=255
			3000K		
			3200K		
			3500K		
			4000K		
			4500K		
			5000K		
			5600K		
			6000K		

			6500K		

	Virt	Color Temperature	7000K	Dimmer<0-255>	Default:3200K, Dimmer=255
			7500K		
			8000K		
			8500K		
			9000K		
			9500K		
			10000K		
		Manual Color Mixer	Red <0-255>		Default: RGBAW=255
			Green <0-255>		
			Blue <0-255>		

3	ual Color Wheel		Amber	<0-255>		
			White	<0-255>		
		Color X-Fade Speed	Off			Default: X-Fade Speed 1
			X-Fade Speed 1			
			X-Fade Speed 2			
			X-Fade Speed 3			
			X-Fade Speed 4			

4	Auto Show	Auto 1	<1-100>		Default: Auto 1;Speed:100
		Auto 2	<1-100>		
		Auto 3	<1-100>		
		Auto 4	<1-100>		
		Auto 5	<1-100>		
		Auto 6	<1-100>		
5	Red Shift	On			Default: On
		Off			
6	Master/Slave	Master			Default: Slave
		Slave			
7	Dimmer Curve	S-Curve			Default: Linear
		Linear			
		Square			
		Inverse Square			
	Dimmer	Off			Default:0ff
		Dimmer 1			

8	Mode	Dimmer 2				
		Dimmer 3				
		Off				
			Red 1	<125>		
			Green 1	<125>		
			Blue 1	<125>		
			Amber 1	<125>		

9	White Balance	Manual	White 1	<125>	Default: RGBAW=255
			Red 2	<125>	
			Green 2	<125>	
			Blue 2	<125>	
			Amber 2	<125>	
			White 2	<125>	

10	LED Frequency	600Hz			Default:1200Hz
		1200 Hz			
		2000 Hz			
		4000 Hz			
		6000 Hz			
		25KHz			
11	Flip Display	No			Default: No
		Yes			
12	Back Light	10S			Default:2min
		30S			
		2min			
		Always On			

13	Key Lock	On			Default:On
		Off			
14	Information	Fixture Hours	<65000>		
		LED Hours	<65000>		

		Versions	<Vx.xx>		
		UID	*******		
15	Temperature	<LED 1:40°C>			
		<LED 2:40°C>			
16	Factory Reset	No			
		Yes			

DMX CHART

Blinder2-C DMX Channel			
1-CH	**Function**	**Value**	**Percent/Setting**
1	Dimmer	000-255	0~100%
3CH	**Function**	**Value**	**Percent/Setting**
1	Dimmer	000-255	0~100%
		000-005	No Function
		006-013	C3050-Md Yellow
		014-021	C3040-Lt Yellow
		022-028	C3240-Amb Yellow
		029-035	C2340-VLt Amber
		036-043	C2040-Lt Amber
		044-051	C2050-Md Amber

2	Color Macro	052-059	C2060-Dk Amber
		060-067	C1050-Lt Red
		068-075	C1080-Md Red
		076-083	C1020-NC Pink
		084-091	C1030-Md Pink
		092-099	C1630-Dk Pink
		100-107	C1250-Md Red Amber
		108-115	C1060-Dk Red Amber
		116-121	C1650-Magenta
		122-130	C6170-Dk Magenta
		131-138	C6020-Lt Lavender
		139-146	C5030-Lt Blue
		147-154	C5020-VLt Blue
		155-162	C5430-Lt Blue2
		163-170	C5070-Blue
		171-178	C5050-Md Blue
		179-186	C5060-Dk Blue
		187-194	C5690-Indigo
		195-202	C5080-VDk Blue
		203-210	C5081-VdK Blue2
		211-218	C4370-Yel Green

		219-226	C4070-Green
		227-234	C4550-Turquoise
		235-242	C4560-Aqua
		243 -250	C4570-Blue Green
		251-255	No Function

3	Color Temperature	000-005	No Function
		006-019	2800K
		020-033	3000K
		034-047	3200K
		048-061	3500K
		062-075	4000K
		076-089	4500K
		090-103	5000K
		104-117	5600K
		118-131	6000K
		132-145	6500K
		146-159	7000K
		160-173	7500K
		174-187	8000K
		188-201	8500K

		202-215	9000K
		216-229	9500K
		230-243	10000K
		244-055	No Function
5CH	Function	Value	Percent/Setting
1	Red	000-255	0~100%
2	Green	000-255	0~100%
3	Blue	000-255	0~100%
4	Amber	000-255	0~100%
5	White	000-255	0~100%
7CH	Function	Value	Percent/Setting
1	Dimmer	000-255	0~100%
2	Red	000-255	0~100%
3	Green	000-255	0~100%
4	Blue	000-255	0~100%
5	Amber	000-255	0~100%
6	White	000-255	0~100%
7	Strobe	000-010	NO Function
		011-255	Strobe Slow to Fast

10CH 1	Function	Value	Percent/Setting
1	Red1	000-255	0~100%
2	Green1	000-255	0~100%
3	Blue1	000-255	0~100%
4	Amber1	000-255	0~100%
5	White1	000-255	0~100%
6	Red2	000-255	0~100%
7	Green2	000-255	0~100%
8	Blue2	000-255	0~100%
9	Amber2	000-255	0~100%
10	White2	000-255	0~100%
10CH 2	Function	Value	Percent/Setting
1	Dimmer	000-255	0~100%
2	Dimmer Fine	000-255	0~100%
3	Red	000-255	0~100%
4	Green	000-255	0~100%
5	Blue	000-255	0~100%
6	Amber	000-255	0~100%
7	White	000-255	0~100%

8	Strobe	000-010	No function
		011-255	Strobe slow to fast
9	Color Macro	000-005	No Function
		006-013	C3050-Md Yellow
		014-021	C3040-Lt Yellow
		022-028	C3240-Amb Yellow
		029-035	C2340-VLt Amber
		036-043	C2040-Lt Amber
		044-051	C2050-Md Amber
		052-059	C2060-Dk Amber
		060-067	C1050-Lt Red
		068-075	C1080-Md Red
		076-083	C1020-NC Pink
		084-091	C1030-Md Pink
		092-099	C1630-Dk Pink
		100-107	C1250-Md Red Amber
		108-115	C1060-Dk Red Amber
		116-121	C1650-Magenta
		122-130	C6170-Dk Magenta
		131-138	C6020-Lt Lavender
		139-146	C5030-Lt Blue

		147-154	C5020-VLt Blue
		155-162	C5430-Lt Blue2
		163-170	C5070-Blue

		171-178	C5050-Md Blue
		179-186	C5060-Dk Blue
		187-194	C5690-Indigo
		195-202	C5080-VDk Blue
		203-210	C5081-VdK Blue2
9	Color Macro	211-218	C4370-Yel Green
		219-226	C4070-Green
		227-234	C4550-Turquoise
		235-242	C4560-Aqua
		243-250	C4570-Blue Green
		251-255	No Function
		000-005	No Function
		006-019	2800K
		020-033	3000K
		034-047	3200K
		048-061	3500K
		062-075	4000K

10	Color Temperature	076-089	4500K
		090-103	5000K
		104-117	5600K
		118-131	6000K
		132-145	6500K
		146-159	7000K
		160-173	7500K
		174-187	8000K
		188-201	8500K
		202-215	9000K
		216-229	9500K
		230-243	10000K
		244-055	No Function
12CH	Function	Value	Percent/Setting
1	Dimmer	000-255	0~100%
2	Red	000-255	0~100%
3	Green	000-255	0~100%
4	Blue	000-255	0~100%
5	Amber	000-255	0~100%
6	White	000-255	0~100%

7	Strobe	000-010	No function
		011-255	Strobe slow to fast
8	Color Macro	000-005	No Function
		006-013	C3050-Md Yellow
		014-021	C3040-Lt Yellow
		022-028	C3240-Amb Yellow
		029-035	C2340-VLt Amber
		036-043	C2040-Lt Amber
		044-051	C2050-Md Amber
		052-059	C2060-Dk Amber
		060-067	C1050-Lt Red
		068-075	C1080-Md Red
		076-083	C1020-NC Pink
		084-091	C1030-Md Pink
		092-099	C1630-Dk Pink
		100-107	C1250-Md Red Amber
		108-115	C1060-Dk Red Amber
		116-121	C1650-Magenta
		122-130	C6170-Dk Magenta
		131-138	C6020-Lt Lavender

8	Color Macro	139-146	C5030-Lt Blue
		147-154	C5020-VLt Blue
		155-162	C5430-Lt Blue2
		163-170	C5070-Blue
		171-178	C5050-Md Blue
		179-186	C5060-Dk Blue
		187-194	C5690-Indigo
		195-202	C5080-VDk Blue
		203-210	C5081-VdK Blue2
		211-218	C4370-Yel Green
		219-226	C4070-Green
		227-234	C4550-Turquoise
		235-242	C4560-Aqua
		243-250	C4570-Blue Green
		251-255	No Function
		000-005	No Function
		006-019	2800K
		020-033	3000K
		034-047	3200K
		048-061	3500K
		062-075	4000K

9	Color Temperature	076-089	4500K
		090-103	5000K
		104-117	5600K
		118-131	6000K
		132-145	6500K
		146-159	7000K
		160-173	7500K
		174-187	8000K
		188-201	8500K
		202-215	9000K
		216-229	9500K
		230-243	10000K
		244-055	No Function

10	Auto programs	000-010	No Function
		011-040	Auto Program 1
		041-080	Auto Program 2
		081-120	Auto Program 3
		121-160	Auto Program 4
		161-200	Auto Program 5
		201-240	Auto Program 6

		241-255	No Function
11	Auto speed	000-255	Auto speed slow to fast
12	Control (Hold 3 Seconds)	000-007	No function
		008-015	Dimmer Reset
		016-023	Red Shift: ON
		024-031	Red Shift: OFF
		032-039	Dimmer: S-Curve
		040-047	Dimmer: Linear
		048-055	Dimmer: Square
		056-063	Dimmer: Inverse Square
		064-071	Dimmer speed mode off
		072-079	Dimmer speed mode1
		080-087	Dimmer speed mode2
		088-095	Dimmer speed mode3
		096-103	X-Fade Speed: OFF
		104-111	X-Fade Speed: 1
		112-119	X-Fade Speed: 2
		120-127	X-Fade Speed: 3
		128-135	X-Fade Speed: 4
		136-255	Future Use (No Function)

13CH	Function	Value	Percent/Setting
1	Dimmer	000-255	0~100%
2	Dimmer Fine	000-255	0~100%
3	Red	000-255	0~100%
4	Red Fine	000-255	0~100%
5	Green	000-255	0~100%
6	GreenFine	000-255	0~100%
7	Blue	000-255	0~100%
8	Blue Fine	000-255	0~100%
9	Amber	000-255	0~100%
10	Amber Fine	000-255	0~100%
11	White	000-255	0~100%
12	White Fine	000-255	0~100%
13	Strobe	000-010	No function
		011-255	Strobe slow to fast

16CH	Function	Value	Percent/Setting
1	Dimmer	000-255	0~100%
2	Dimmer Fine	000-255	0~100%
3	Red	000-255	0~100%
4	Red Fine	000-255	0~100%

5	Green	000-255	0~100%
6	Green Fine	000-255	0~100%
7	Blue	000-255	0~100%
8	Blue Fine	000-255	0~100%
9	Amber	000-255	0~100%
10	Amber Fine	000-255	0~100%
11	White	000-255	0~100%
12	White Fine	000-255	0~100%
13	Strobe	000-010	No function
		011-255	Strobe slow to fast
		000-005	No Function
		006-013	C3050-Md Yellow
		014-021	C3040-Lt Yellow
		022-028	C3240-Amb Yellow
		029-035	C2340-VLt Amber
		036-043	C2040-Lt Amber
		044-051	C2050-Md Amber
		052-059	C2060-Dk Amber
		060-067	C1050-Lt Red
		068-075	C1080-Md Red
		076-083	C1020-NC Pink

14	Color Macro	084-091	C1030-Md Pink
		092-099	C1630-Dk Pink
		100-107	C1250-Md Red Amber
		108-115	C1060-Dk Red Amber
		116-121	C1650-Magenta
		122-130	C6170-Dk Magenta
		131-138	C6020-Lt Lavender
		139-146	C5030-Lt Blue
		147-154	C5020-VLt Blue
		155-162	C5430-Lt Blue2
		163-170	C5070-Blue
		171-178	C5050-Md Blue
		179-186	C5060-Dk Blue
		187-194	C5690-Indigo
		195-202	C5080-VDk Blue
		203-210	C5081-VdK Blue2
		211-218	C4370-Yel Green
		219-226	C4070-Green
		227-234	C4550-Turquoise
		235-242	C4560-Aqua

14	Color Macro	243-250	C4570-Blue Green
		251-255	No Function
15	Color Temperature	000-005	No Function
		006-019	2800K
		020-033	3000K
		034-047	3200K
		048-061	3500K
		062-075	4000K
		076-089	4500K
		090-103	5000K
		104-117	5600K
		118-131	6000K
		132-145	6500K
		146-159	7000K
		160-173	7500K
		174-187	8000K
		188-201	8500K
		202-215	9000K
		216-229	9500K
		230-243	10000K
		244-055	No Function

16	Control (Hold 3 Seconds)	000-007	No function
		008-015	Dimmer Reset
		016-023	Red Shift: ON
		024-031	Red Shift: OFF
		032-039	Dimmer: S-Curve
		040-047	Dimmer: Linear
		048-055	Dimmer: Square
		056-063	Dimmer: Inverse Square
		064-071	Dimmer speed mode off
		072-079	Dimmer speed mode1
		080-087	Dimmer speed mode2
		088-095	Dimmer speed mode3
		096-103	X-Fade Speed: OFF
		104-111	X-Fade Speed: 1
		112-119	X-Fade Speed: 2
		120-127	X-Fade Speed: 3
		128-135	X-Fade Speed: 4
		136-255	Future Use (No Function)

28CH	Function	Value	Percent/Setting
1	Dimmer	000-255	0~100%

2	Dimmer Fine	000-255	0~100%
3	Red1	000-255	0~100%
4	Red1 Fine	000-255	0~100%
5	Green1	000-255	0~100%
6	Green1 Fine	000-255	0~100%
7	Blue1	000-255	0~100%
8	Blue1 Fine	000-255	0~100%
9	Amber1	000-255	0~100%
10	Amber1 Fine	000-255	0~100%
11	White1	000-255	0~100%
12	White1 Fine	000-255	0~100%
13	Red2	000-255	0~100%
14	Red2 Fine	000-255	0~100%
15	Green2	000-255	0~100%
16	Green2 Fine	000-255	0~100%
17	Blue2	000-255	0~100%
18	Blue2 Fine	000-255	0~100%
19	Amber2	000-255	0~100%
20	Amber2 Fine	000-255	0~100%
21	White2	000-255	0~100%
22	White2 Fine	000-255	0~100%

23	Strobe	000-010	No function
		011-255	Strobe slow to fast
24	Color Macro	000-005	No Function
		006-013	C3050-Md Yellow
		014-021	C3040-Lt Yellow
		022-028	C3240-Amb Yellow
		029-035	C2340-VLt Amber
		036-043	C2040-Lt Amber
		044-051	C2050-Md Amber
		052-059	C2060-Dk Amber
		060-067	C1050-Lt Red
		068-075	C1080-Md Red
		076-083	C1020-NC Pink
		084-091	C1030-Md Pink
		092-099	C1630-Dk Pink
		100-107	C1250-Md Red Amber
		108-115	C1060-Dk Red Amber
		116-121	C1650-Magenta
		122-130	C6170-Dk Magenta
		131-138	C6020-Lt Lavender
		139-146	C5030-Lt Blue

		147-154	C5020-VLt Blue

24	Color Macro	155-162	C5430-Lt Blue2
		163-170	C5070-Blue
		171-178	C5050-Md Blue
		179-186	C5060-Dk Blue
		187-194	C5690-Indigo
		195-202	C5080-VDk Blue
		203-210	C5081-VdK Blue2
		211-218	C4370-Yel Green
		219-226	C4070-Green
		227-234	C4550-Turquoise
		235-242	C4560-Aqua
		243-250	C4570-Blue Green
		251-255	No Function
		000-005	No Function
		006-019	2800K
		020-033	3000K
		034-047	3200K
		048-061	3500K
		062-075	4000K

25	Color Temperature m	076-089	4500K
		090-103	5000K
		104-117	5600K
		118-131	6000K
		132-145	6500K
		146-159	7000K
		160-173	7500K
		174-187	8000K
		188-201	8500K
		202-215	9000K
		216-229	9500K
		230-243	10000K
		244-055	No Function
26	Auto programs	000-010	No Function
		011-040	Auto Program 1
		041-080	Auto Program 2
		081-120	Auto Program 3
		121-160	Auto Program 4
		161-200	Auto Program 5
		201-240	Auto Program 6
		241-255	No Function

27	Auto speed	000-255	Auto speed slow to fast
28	Control (Hold 3 S econds)	000-007	No function
		008-015	Dimmer Reset
		016-023	Red Shift: ON
		024-031	Red Shift: OFF
		032-039	Dimmer: S-Curve

28	Control (Hold 3 S econds)	040-047	Dimmer: Linear
		048-055	Dimmer: Square
		056-063	Dimmer: Inverse Square
		064-071	Dimmer speed mode off
		072-079	Dimmer speed mode1
		080-087	Dimmer speed mode2
		088-095	Dimmer speed mode3
		096-103	X-Fade Speed: OFF
		104-111	X-Fade Speed: 1
		112-119	X-Fade Speed: 2
		120-127	X-Fade Speed: 3
		128-135	X-Fade Speed: 4
		136-255	Future Use (No Function)

HSV	Function	Value	Percent/Setting

1	Hue	000-255	0~100%
2	Saturation	000-255	0~100%
3	Value	000-255	0~100%

MAINTENANCE

MAINTENANCE AND CLEANING THE UNIT

- Make sure the area below the installation place is free from unwanted persons during setup.
- Switch off the unit, unplug the main cable and wait until the unit has cooled down.
- All screws used for installing the device and any of its parts should be tightly fastened and should not be corroded.
- Housings, fixations and installation spots (ceiling, trusses, suspensions) should be totally free from any deformation.
- The main cables must be in impeccable condition and should be replaced immediately even when a small problem is detected.
- It is recommended to clean the front at regular intervals, from impurities caused by dust, smoke, or other particles to ensure that the light is radiated at maximum brightness. For cleaning, disconnect the main plug from the socket. Use a soft, clean cloth moistened with a mild detergent. Then carefully wipe the part dry.

For cleaning other housing parts use only a soft, clean cloth. Never use a liquid, it might penetrate the unit and cause damage to it.

TROUBLESHOOTING

Problems	Possible causes	Checks and remedies

Fixture does not light up		• No mains supply Dimmer fader set to 0 • All color faders set to 0 Faulty LED • Faulty LED board		• Check the power supply voltage • Increase the value of the dimmer channels Increase the value of the color channels • Replace the LED board • Replace the LED board
General low light intensity		• Dirty lens assembly • Misaligned lens assembly	Install lens assembly properly	
Fixture does not power up		• No power • Loose or damaged power cord • Faulty internal power supply		• Check for power on power outlet • Check power cord • Replace internal power supply
Fixture does not respond to DMX		• Wrong DMX addressing • Damaged DMX cables • Bouncing signals		• Check control panel and unit addressing • Check DMX cables • Install terminator as suggested

Contact an authorized service center in case of technical problems or not reported in the table can not be resolved by the procedure given in the table.

EKINC.

Address: NO.55 Zhongzhun Road, Cuiheng New District, Zhongshan City, Guangdong Province

Phone: 0086 (0760) 88280099

www.eklights.com

FAQ

What is the purpose of this lighting control unit?

This unit allows users to control various lighting effects such as color selection, dimmer speed, and fade speed for customized lighting setups.

How do I adjust the color settings?

Use the color control options on the unit to select from a range of colors and fine-tune the settings for each color option based on your preferences.

Can I save my preferred settings for future use?

Unfortunately, this unit does not have a memory function to save settings. You will need to adjust the settings each time you use the unit.

Documents / Resources

	EK BLINDER-II-C LED Flood [pdf] User Manual BLINDER-II-C LED Flood, BLINDER-II-C, LED Flood, Flood

References

- User Manual

BLINDER-II-C, BLINDER-II-C LED Flood, EK, Flood, LED

EK Flood

Leave a comment

Your email address will not be published. Required fields are marked *

Comment *

Name

Email

Website

Save my name, email, and website in this browser for the next time I comment.

Post Comment

Search:

e.g. whirlpool wrf535swhz

Search

Manuals+ | Upload | Deep Search | Privacy Policy | @manuals.plus | YouTube

This website is an independent publication and is neither affiliated with nor endorsed by any of the trademark owners. The "Bluetooth®" word mark and logos are registered trademarks owned by Bluetooth SIG, Inc. The "Wi-Fi®" word mark and logos are registered trademarks owned by the Wi-Fi Alliance. Any use of these marks on this website does not imply any affiliation with or endorsement.